LOCOMOTIVE PORTFOLIOS

GREAT WESTERN

PANNIER TANK CLASSES

AN OVERVIEW OF THEIR DESIGN & DEVELOPMENT

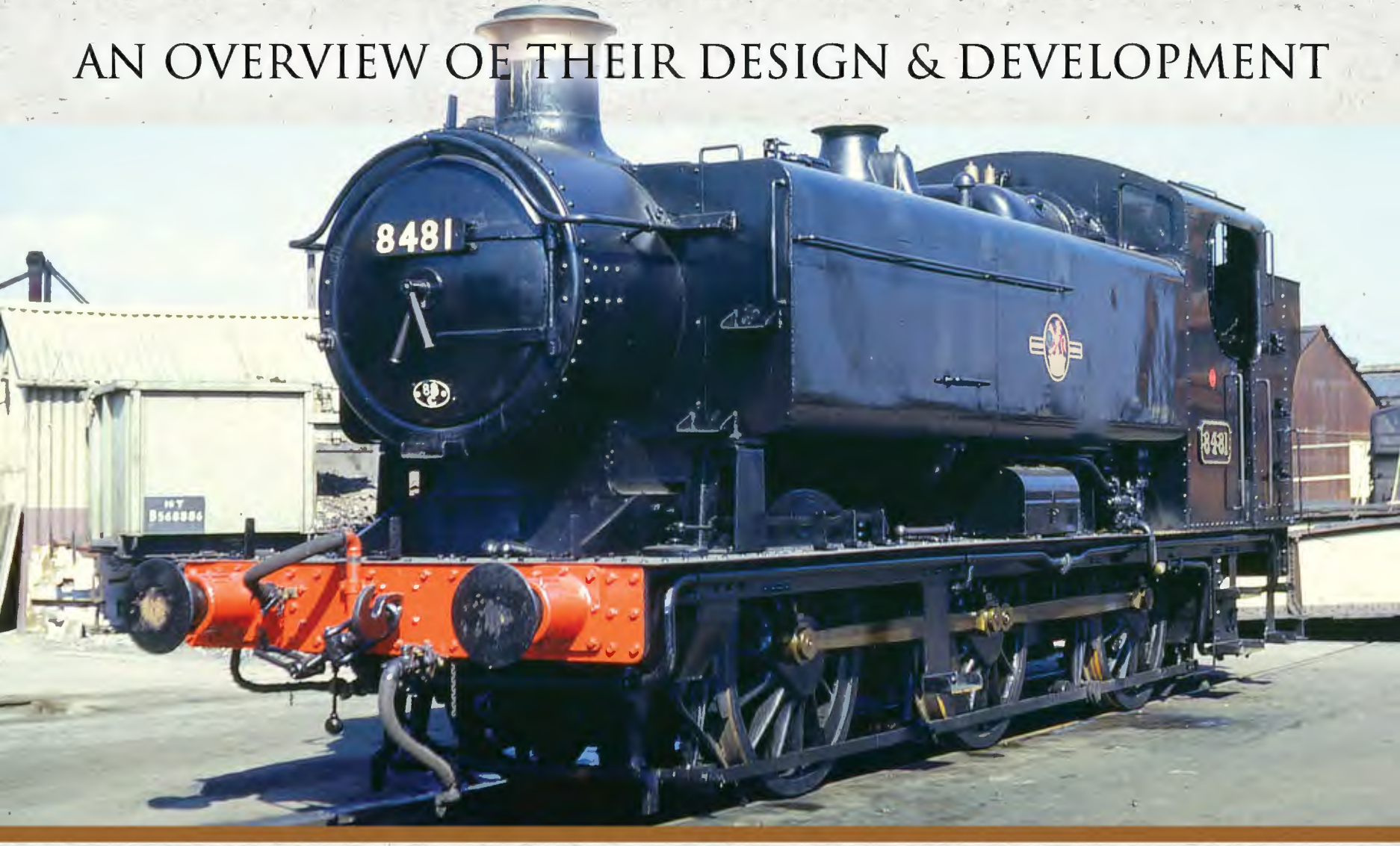

DAVID MAIDMENT

LOCOMOTIVE PORTFOLIOS

GREAT WESTERN

PANNIER TANK CLASSES

AN OVERVIEW OF THEIR DESIGN AND DEVELOPMENT

GREAT WESTERN

PANNIER TANK CLASSES

AN OVERVIEW OF THEIR DESIGN AND DEVELOPMENT

DAVID MAIDMENT

PEN & SWORD
TRANSPORT
AN IMPRINT OF PEN & SWORD BOOKS LTD
YORKSHIRE – PHILADELPHIA

First published in Great Britain in 2019 by
Pen & Sword Transport
An imprint of Pen & Sword Books Ltd
Yorkshire - Philadelphia

ISBN 978 1 52673 451 8

A CIP catalogue record for this book is available from the British Library.

Typeset in Palatino by Aura Technology and Software Services, India
Printed and bound in India by Replika Press Pvt. Ltd.

Pen & Sword Books Ltd incorporates the Imprints of Pen & Sword Books Archaeology, Atlas, Aviation, Battleground, Discovery, Family History, History, Maritime, Military, Naval, Politics, Railways, Select, Transport, True Crime, Fiction, Frontline Books, Leo Cooper, Praetorian Press, Seaforth Publishing, Wharncliffe and White Owl.

For a complete list of Pen & Sword titles please contact

PEN & SWORD BOOKS LIMITED
47 Church Street, Barnsley, South Yorkshire, S70 2AS, England
E-mail: enquiries@pen-and-sword.co.uk
Website: www.pen-and-sword.co.uk

Or

PEN AND SWORD BOOKS
1950 Lawrence Rd, Havertown, PA 19083, USA
E-mail: Uspen-and-sword@casematepublishers.com
Website: www.penandswordbooks.com

All David Maidment's royalties from this book will be donated to the Railway Children charity [reg. no. 1058991] [www.railwaychildren.org.uk]

Other books by David Maidment:

Novels (Religious historical fiction)
The Child Madonna, Melrose Books, 2009
The Missing Madonna, PublishNation, 2012
The Madonna and her Sons, PublishNation, 2015

Novels (Railway fiction)
Lives on the Line, Max Books, 2013

Non-fiction (Railways)
The Toss of a Coin, PublishNation, 2014
A Privileged Journey, Pen & Sword, 2015
An Indian Summer of Steam, Pen & Sword, 2015
Great Western Eight-Coupled Heavy Freight Locomotives, Pen & Sword, 2015
Great Western Moguls and Prairies, Pen & Sword, 2016
Southern Urie and Maunsell 2-cylinder 4-6-0s, Pen & Sword, 2016
Great Western Small-Wheeled Double-Framed 4-4-0s, Pen & Sword, 2017
The Development of the German Pacific Locomotive, Pen & Sword 2017
Great Western Large-Wheeled Double-Framed 4-4-0s, Pen & Sword 2017
Great Western Counties, 4-4-0s, 4-4-2Ts & 4-6-0s, Pen & Sword 2018
Southern Maunsell Moguls and Tank Engines, 2018
Southern Maunsell 4-4-0s, Pen & Sword, 2019
Great Western Granges, Pen & Sword, 2019
Cambrian Railways Gallery, Pen & Sword, 2019

Non-fiction (Street Children)
The Other Railway Children, PublishNation, 2012
Nobody ever listened to me, PublishNation, 2012

Cover photo:
Exeter's 8481 ex-works at Swindon, 29.9.1963 (Bruce Oliver)

Back cover:
Croes Newydd's 1628 at Trevor, 4.8.1966 (Bruce Oliver)

Collett 57XX 4692 on former Southern Region territory at Exeter Central, 5.9.1964 (Bruce Oliver)

CONTENTS

PREFACE

This book is my eleventh in the Pen and Sword 'Locomotive Portfolio' series, and like my previous 'magnum opus' on the German Pacifics, is in danger of running out of control, for the subject is so vast and cannot easily be contained. My objective was to write a comprehensive book on the Great Western pannier tank engines and their saddle tanks predecessors. I could have split the book into two volumes, but I wanted to bring the whole story together. Others have delved – more deeply than I – into the detailed description of the modern panniers in the Irwell Press series *The Pannier Papers*, or have given greater precedence to the story of the preserved engines as Robin Jones did in his Crowood Press publication *Great Western Railway Pannier Tanks.* But I wanted the full story, all the saddle tank classes from the Great Western and the various South Wales 'absorbed' railways, their conversion to pannier tank form and the way Collett and Hawksworth kept the concept live right through to the mid-1950s. I wanted to cover not just their history and construction, but to probe more into their operation (for I was an operations manager, not an engineer) and because I was lucky enough to know them from the inside as a Western Region management trainee and stationmaster (and even a temporary shedmaster) to share some of my own personal experiences of how my railway enthusiasm and career intertwined with those active little beasts that seemed to get just about everywhere.

And there were so many of them, well over 2,000 spanning a century, though never quite all at the same time. And so many classes. The Great Western in the Dean and Churchward era never knew quite how to classify them. The famous 'Buffalos' were variously known as the '727', '1076', '1228' and '1561' classes, appearing at different intervals between 1870 and 1878, and the class name by which they became known was bestowed on yet another series starting at 1134 in 1874 ... Do I treat each variation as a separate class or lump them together? And after myriad rebuildings and reboilerings they became very different, then in the end so many finished up virtually identical, the dimensions repeating themselves again and again.

I'm indebted to so many people in helping me put this story together. The valuable research that previous authors have undertaken and made public as instanced in the bibliography at the end of the book, the access to libraries at the clubrooms of the Manchester Locomotive Society and the Model Railway Club, the huge photo archives of the Great Western Trust and again, the Manchester Locomotive Society. I thank most sincerely the individuals who have helped me find the photos – Paul Shackcloth at the MLS Stockport clubroom; Laurence Waters at Didcot; John Scott-Morgan, who helped me search through his own photo collection; Nick Lera; and Rodney Lissenden who holds the colour slide collection of the late Dick Riley. And as all the royalties once more will be donated to the Railway Children charity (www.railwaychildren.org.uk) I acknowledge their generosity in allowing me to publish their photos without or at a much reduced fee. In particular, I acknowledge the help and support of John Hodge with whom I worked in my days in South Wales and again many years later and who has not only provided me with many photos from his own collection but also researched for me the allocations of the saddle and pannier tanks in the early years of the twentieth century.

And lastly I thank the Pen and Sword team for being tolerant that once again I have exceeded my contract terms as I failed to curtail my enthusiasm – Janet Brookes, History and Transport Production Manager, Carol Trow, who actually says she likes editing my books, Paul Wilkinson who does such a wonderful job in designing the Locomotive Portfolio series and once again, John Scott-Morgan, who is friend as well as Transport Commissioning Editor.

David Maidment
November 2018

INTRODUCTION

Few railway books are about shunting or shunting engines, yet that activity was a vital part of any railway company's business, especially a company like the Great Western Railway, whose profits came mainly from freight, with predominantly coal haulage, right up until the end of steam on British Railways. The effective Public Relations Department of the Great Western may have associated the railway with holidays on the golden sands of Devon and Cornwall, but it was in the unpublicised valleys and docks of South Wales and the industrial West Midlands where the company made its profits. In 1921, Great Western engines ran approximately 63 million miles, an average of 20,000 per locomotive, of which some 15 million were calculated as 'shunting miles', at around 4,900 per GW shunting engine. These figures were significantly better than the other railways with substantial freight activity, in particular the LNWR, Midland and Great Northern.

For a couple of years at the end of the 1940s, I spent twenty minutes after school on Surbiton station awaiting my electric train back to Hampton Court, spotting 'Merchant Navies', 'West Countries', 'Lord Nelsons' and 'King Arthurs', whilst the background to all this was the erratic cacophony of an Edwardian Drummond 4-4-0 attempting to shunt the coal wagons in the sidings, slithering and sliding, interspersed with thunderous slipping on damp days. Mainly ignored at the time – it was nearly always L11 30406 and therefore of little interest to an eleven year old trainspotter – I marvel now at the unsuitability of such power, although I suppose the engine continued with pick-up freight work. The Great Western did it differently.

From the earliest days, the GW and the South Wales companies had used 0-6-0 saddle tanks for shunting and trip working, and at the 'Grouping' at the end of 1922, had 3,188 locomotives of which one third were these shunting tank engines. As such engines were reboilered with Belpaire fireboxes and the 'absorbed' engines were 'Swindonised', many of the saddle tanks were converted to become pannier tanks, to retain easy accessibility to the inside motion, but improve the forward visibility and incorporate the new firebox arrangements. The improved stability of a pannier tank compared with a saddle tank with its lower centre of gravity enabled the 0-6-0PTs to embrace a much greater variety of duties at higher speeds. Just before nationalisation, from statistics published in 1947, the Great Western had 1,269 0-6-0 tank engines out of a total fleet of 3,858 locomotives. 2,393 0-6-0Ts were eventually built or modified to GWR design, although, of course, they never all existed at the same time.

The basic needs for a shunting engine were a strong initial haulage capacity, fast operating brakes, ability to reverse quickly and easily, and good visibility from the cab for the driver to be able to watch staff on the ground whilst in easy reach of both regulator and brake. The Great Western panniers tanks as developed in the 1920s had all of these required characteristics and the largest class of all – the 863 eventual members of Collett's 57XX class – worked throughout the railway and subsequent BR Western Region (and also infiltrated the Southern and London Midland Regions) and were ideal and popular for this type of work. The only Great Western or Western Region shed at which I cannot trace any 57XX pannier tank allocation is Machynlleth. Even that depot had at one stage one solitary pannier tank – 7406.

These engines were so versatile, however, that in addition to shunting and freight trip work, they performed passenger work on

many branch lines, acted as bankers on the many stiff gradients in the West Country and South Wales, and were a common sight at Paddington where for years they undertook the empty stock working between Old Oak Common carriage sidings and Paddington station. They were not sluggards either. Pannier tanks on test ran up to 60 mph without any problems and on occasions substituted for ailing larger engines on express work, where they are said to have reached 65 mph, even if the ride was a trifle lively. I certainly experienced them on Cardiff portions of North & West expresses between Pontypool Road and Cardiff, as well as on passenger trains from Pontypool Road across the 'Heads of the Valleys' line to Neath and from both Neath and Newport up to Brecon where they showed a fair turn of speed with two or three coach trains. However, they were equally at home on the long slog of hauling a twelve or thirteen coach train up over the flyover at North Pole Junction en route from Old Oak to Paddington.

The Cardiff Railway had three pannier or semi-pannier tanks built in 1882 and 1889 for dock shunting. The first GW engine equipped with pannier tanks appears to have been a curious 4-4-0T, No. 1490, built in 1898. It was designed as a successor to the 'Metropolitan' tanks but proved too heavy and spent much of its life shunting at Bath and Swindon. This was followed in 1901 by two 0-6-4 crane tanks, and a 27XX saddle tank with Belpaire firebox which received redesigned pannier tanks in 1904. The '1016' and '1076' class double-framed saddle tanks, built between 1867 and 1881, started to receive pannier tanks from 1911 and in the end only a relatively small number of the combined fleet of 326 engines of the two classes remained with saddle tanks until their withdrawal. The large number of assorted GW saddle tanks were converted to pannier tanks in the 1920s, as were the absorbed 0-6-0STs from the Barry, Cardiff, Rhymney, Brecon & Merthyr Railways and a few other assortments from the Cleobury & Mortimer, South Wales Mineral and Powlesland & Mason companies.

A bevy of early GW pannier tanks at Stafford Road shed, Wolverhampton shortly before the Second World War. From right to left are numbers 1810, 1947, 1524 and 1632. Manchester Locomotive Society Collection (MLS)

Collett was concerned with production and maintenance costs and decided to standardise a pannier tank design to replace the aged and increasingly costly Victorian engines in the late 1920s. The 57XX, which became the standard GW pannier tank until the early 1960s, indeed to the end of steam on the Western Region, was based on the '2721' class of 1897 vintage, with higher boiler pressure and a few other detail improvements, and was built steadily from the end of 1928 until 1949 and more would have been built but for the intervention in 1947 of the Great Western Railway Chairman, Sir James Milne, who disliked their antiquated appearance (he took particular objection to the large dome) and directed Hawksworth to produce something that looked more modern.

Between 1947 and 1956, the Great Western and the Western Region management of BR ordered some 210 locomotives of Hawksworth's 'improved' 57XX, the 94XX, with standard Swindon taper boilers as fitted to the Collett '2251' class of 0-6-0s, although with increased weight which restricted their route availability, and wider cab which led to complaints from crews that could not easily reach the controls when shunting, their advance over the 57XX was very questionable. With the development and introduction on a large scale of the 0-6-0 diesel shunter, these engines became quickly redundant and the final batch in the 34XX series lasted barely five years, and

4696, built in February 1945, at its home base, Stourbridge (84F), a depot with a large allocation of pannier tanks until the end of Western Region steam, many of which are seen in this photo with one solitary 56XX 0-6-2T, 4 July 1959. 4696 was one of the last survivors, not being withdrawn until November 1966 from Tyseley shed, by then transferred to the London Midland Region. (F.K. Davies/John Hodge)

Four pannier tanks take charge of empty stock working at Waterloo and dominate the scene at Nine Elms in 1960, when there is also evidence that the Southern's main South Western route depot is also host to engines displaced from the Kent Coast electrification the previous year – an 'H' 0-4-4T, a 'D1' 4-4-0 and an E4 0-6-2T can just be glimpsed. (GW Trust)

some were stored even as they were delivered. They were built by a variety of private companies – Robert Stephenson, Bagnall, and Yorkshire Engine Company – with only the first ten built in 1947 being constructed at Swindon. Pressure to maintain employment at such engineering companies as men were released from the armed forces must have been the political influence behind the decision to build so many steam shunting engines so late in the day.

The widespread production of the '08' diesel shunter in the 1950s and the branch line closures in the early 1960s reduced the duties of the pannier tanks significantly and the GW standard designs fell to withdrawal and the scrap yard from the late 1950s with the period between 1959 and 1962 seeing a very large number of withdrawals – the 94XX and 57XX sharing the same fate regardless of when built. However, the usefulness of the 57XX class outside its traditional territory was recognised and incursions were made into the Southern Region to replace the LSWR M7 0-4-4Ts on Clapham Junction-Waterloo empty stock working and West Country branches, and the SE&CR R1 0-6-0Ts in the Folkestone area.

When a large swathe of the Western Region's West Midlands territory was taken over by the London Midland Region, a number of the 57XX based in particular at Tyseley, Oxley and Croes Newydd survived until 1966 as the drive to eliminate steam was pursued more vigorously by Western Region management. The usefulness of the 57XX was also recognised by London Transport and a few were purchased to replace worn out steam stock of the former Metropolitan Railway, for use on engineering trains out of Neasden and Lillie Bridge and these became the last survivors of the pannier

tank train working regime, the final two not succumbing until 1971. A few were retained by the National Coal Board for colliery siding shunting, the last being retired in 1975. However, many 57XX panniers have been preserved and several are operational on Britain's heritage railways, with just one example of the 94XX, 9466, although the Swindon built precursor of the class, 9400, is exhibited at STEAM museum at Swindon. A 57XX even became a model for 'Duck' in the Reverend Audrey's famous *Thomas the Tank Engine* series.

This book will describe the design, construction and operation of all the pannier tanks built for the Great Western and its absorbed companies, the mainstream designs, and also the small groups such as the 54/64/74XX with larger wheels from branch work, the 1366 short wheelbase engines and the late outside cylinder 15XX of Hawksworth. It will acknowledge the large part played by these often-overlooked engines in the running of the railway business for nearly 100 years, albeit in the first half of that period in saddle rather than pannier tank form. From my experiences as a temporary employee at Old Oak Common in the late 1950s, a Management Trainee (Traffic Apprentice) on the Western Region between 1961 and 1964, and Stationmaster and Area Manager in the South Wales Valleys in 1964-5, I am able to incorporate some personal experience of these engines and receive at first hand the knowledge of the fitters and engine crews who worked with them.

It is remarkable that the saddle tanks of the 1870s in two main types – with 4ft 7½in and 4ft 1½in diameter wheels – were rebuilt in the 1890s, reboilered in the early 1900s, changed into pannier tank form during the first two decades of the twentieth century and resulted in the basic concept of locomotives like 9682, the last 57XX built in May 1949, the 4ft 1½in wheeled 1669 constructed in May 1955 and Hawksworth's 3409, the last of the breed, built in October 1956.

Chapter 1

THE ENGINEERS

Sir Daniel Gooch

Daniel Gooch was born in 1816 in Bebington, Northumberland, the son of an ironfounder and his family and moved to Tredegar in 1831. He trained under Thomas Ellis who worked with Samuel Homfray and Richard Trevithick to pioneer steam locomotion. At the age of 20, he was recruited by Brunel as Superintendent of Locomotive Engines, starting in 1837. In 1840, he found the site for Swindon Works and in 1846 designed the prototype of the 'Iron Duke' broad gauge 4-2-2, *Great Western*, the first engine constructed at the new Works. Although he was mainly involved in the design and construction of broad gauge engines at Swindon, between 1854 and 1864 he designed a number of standard gauge engines for the GWR's Northern Division at Wolverhampton, and this included the first 0-6-0 saddle tanks, the origin of the long line of GW saddle and pannier tanks (Nos.93 and 94).

He resigned in 1864 when he entered politics as a Conservative MP but continued as a member of the GWR Board, a post he retained until 1889. He died on 15 October 1889.

Joseph Armstrong

Joseph Armstrong was born in Bewcastle, Cumberland, in 1816 and lived with his family in Newburn-on-Tyne from 1824. He attended Bruce's School in Newcastle where Robert Stephenson had studied and would have been well aware of the Wylam Waggonway at Newburn where the famous locomotive *Puffing Billy* was operating. His first employment was at the local Walbottle Colliery railway worked by stationary engines. He gained some experience driving locomotives on the Stockton and Darlington Railway through the influence of Stephenson and Timothy Hackworth, and at the age of 20 in 1836 became a driver on the Liverpool and Manchester Railway. He was appointed as a foreman on the Hull and Selby Railway and in 1847, he was promoted to assistant locomotive superintendent on the Shrewsbury and Chester Railway, becoming its Locomotive Superintendent in 1853, taking responsibility for locomotives of the Shrewsbury and Birmingham Railway at the same time, working at the Wolverhampton Locomotive Works.

In September 1854, the two railways amalgamated with the GWR as its Northern Division, Joseph Armstrong remaining the Northern Division Locomotive Engineer reporting to Daniel Gooch at Swindon. In 1859, Wolverhampton began constructing locomotives to Armstrong's design under the delegated authority of Gooch. In 1864, Gooch resigned and Joseph Armstrong replaced him, now as Locomotive, Carriage & Wagon Superintendent. He moved to Swindon, leaving Wolverhampton in charge of his previous assistant, his younger brother, George. He was hardworking and strict, intolerant of corruption and injustice and involved in civic affairs. He was a Methodist lay preacher and generous to his staff and townspeople, president of the Swindon Mechanics Institute and Chairman of the Swindon New Town Board.

After the Gauge Commission decided in 1846 against the expansion of the broad gauge, Armstrong was faced with designing engines to replace them and from 1868 onwards was building engines entirely for standard and mixed gauge track. He had to cover all motive power needs from express power to shunting locomotives and many of the saddle tanks to be described in this book originated in his era. He was specifically responsible for the design of the '302' class and his 'masterpiece' tank engine, the '1076' or 'Buffalo'

class. Many other classes were built at Wolverhampton during this period under the aegis of his younger brother, George, and it is not possible to distinguish the extent of the influence Joseph had over his brother's designs. It is said that he left the Great Western better provided with sound engines for every class of traffic than any other railway in Britain, and probably in the world.

He died of a heart attack in 1877, aged 61, and his funeral in June was attended by 2,000 workers from Swindon Works, 100 from Wolverhampton and many from other railway towns on the GWR and other railways, such was his reputation – in all 6,000 people crowded into St Mark's churchyard at Swindon where he was buried. He was survived by his wife, Sarah, whom he had married in 1848, and nine children, four of whom were apprenticed at Swindon Works.

George Armstrong

George Armstrong was born in Canada in 1822 but moved with his family to Bewcastle in 1824. He too moved to Newcastle and followed his older brother in his interests in engineering around the Northumberland colliery early railways. He also worked at Walbottle Colliery and followed his brother to the Hull and Selby Railway and worked for a period on the Northern Railway in France. George returned to Britain in 1848 and became an engine driver, then foreman on the Shrewsbury and Chester Railway and followed his brother again to Wolverhampton, becoming his assistant and Works Manager.

When Joseph Armstrong moved to Swindon in 1864, William Dean became his assistant at Swindon and George was promoted as the GWR Northern Division Locomotive Superintendent at Wolverhampton, where his brother gave him a free hand in designing standard gauge locomotives. George built relatively few tender engines, but significant numbers of 2-4-0 and 0-6-0 side and saddle tanks. Many of his saddle tanks are the subject of this book, being converted during the Churchward and Collett eras to the pannier tank form (the class '1016' double-framed saddle tanks, the '645', '850' classes and the rebuilding of 0-6-0 tender engines as saddle tanks, of classes '119' and '322').

George remained in charge of the Wolverhampton Works for thirty-three years, during which time he managed the building or rebuilding of 1,139 locomotives. He retired in 1897 and died in 1901. He remained single and is buried at St Mary's church, Bushbury, Wolverhampton.

William Dean

William Dean was born in 1840, educated at Haberdasher's School in New Cross and in 1855 he was apprenticed to Joseph Armstrong, then Locomotive Superintendent of the Great Western at Stafford Road Works, Wolverhampton. He advanced rapidly, becoming Armstrong's chief assistant when still only twenty-three years of age. Armstrong moved to Swindon as Chief Locomotive, Carriage and Wagon Superintendent in 1864 and left Dean in charge of Wolverhampton Works. Dean moved to Swindon in 1868 and became Chief Assistant Superintendent there until Armstrong's early death in 1877.

Dean was appointed in his place at the age of 37 and held office for exactly twenty-five years and had over 13,000 men under him at Swindon itself plus enginemen all over the GWR system. He became a Justice of the Peace there and was highly respected both by his staff and in the community as a caring manager and public-spirited. A full member of the Institute of Mechanical Engineers since 1868, in 1878 he attained a similar rank in the Institute of Civil Engineers. He was a very practical man and aimed for simplicity, economy and easy maintenance of his rolling stock. He added considerably to the growing stock of the company's 0-6-0 saddle tanks, designing and constructing the '1813', '1661', '1854' and '655' classes and the single 4-4-0 pannier tank, 1490.

By the 1890s, his health had begun to deteriorate and by 1896 his mental health began to crumble. Churchward was appointed as his assistant in 1897 and had the very delicate task of supporting him during his final years in theoretical charge, as the Company, after so many excellent years of service, was reluctant to terminate Dean's career. He eventually retired in 1902 aged 63, much revered in Swindon despite his failing health, and moved to a house in Folkestone bought for him by the GWR Company. He died in 1905 aged 66.

George Jackson Churchward

Churchward, his successor and virtual co-manager during the final five years or so, was born in 1857 in Stoke Gabriel on the River Dart between Kingswear and

Totnes and joined the South Devon Railway at Newton Abbot in 1873. After absorption of that railway by the Great Western in 1876, he transferred aged just nineteen to the Swindon Drawing Office, and after a few rapid promotions, was appointed as Carriage and Wagon Works Manager in 1885. Ten years later, he became Swindon Works Manager and identified as Dean's successor when he became his Chief Assistant in 1897. Although he was not appointed as Locomotive Superintendent until 1 June 1902, he had been developing his ideas within the ample scope given him by Dean and had already written a paper on a scheme for a limited number of 'standard' locomotive designs by January 1901. However, in the interim he maintained a steady production of Dean designed engines, albeit showing an increasing influence of his own ideas, especially boiler design. The '2721' and smaller wheeled '2021' class emerged during the dual management period, developed from Dean's earlier designs.

Although he is remembered for his main line standard express passenger and freight engines, his development of boilers and use of the Belpaire firebox meant that he initiated on a large scale the reboilering and equipping with pannier tanks many of his predecessors' saddle tanks, although he built no new shunting engines of his own. He did adapt one of his predecessor's designs to create a 0-6-4 crane tank for service activity in both Swindon and Wolverhampton Works and drew the outline plan for an 0-8-0 pannier tank, but this was never developed.

Churchward had an even temperament and a dignified bearing suggesting a 'country squire', strengthened by his interest in country pursuits. But he was also a good administrator and leader of men. He drew out the best from his staff and created a culture of good teamwork, a tradition and practice he inherited from Dean and his predecessors. In 1916, his title was changed to that of Chief Mechanical Engineer, he was awarded the CBE at the end of the war and in October 1920 he was the first Honorary Freeman of Swindon, of which he'd been the first Mayor as far back as 1900. It is well known that his life ended run down by one of his successor's engines whilst crossing the line from his home to the Works, nearly twelve years after his retirement.

Charles Benjamin Collett

Charles Collett had come to Swindon in 1894 as a draughtsman and was spotted by Churchward and appointed as Assistant Manager in the Locomotive Works in 1900, and Works Manager in 1912, becoming Churchward's deputy in 1919. The far-seeing strategy of Churchward was the foundation of Collett's design programme and his involvement in the management of the Works during the production of the standard GW locomotives gave him a clear insight into the background of the basic designs, which he continued from his appointment to the senior post in 1922.

However, the severe reduction in coal output following the 1921 and 1926 miners' strikes, the reduction in peacetime requirements and then the impact of the Depression required him to reduce annual costs by £500,000, a colossal challenge, in excess of £25 million in today's currency. Some workers were laid off, but Collett sought savings from improved methods in the Works and keeping most essential new builds to existing designs. Although best remembered for the 'Kings' and 'Castles', part of his cost savings was to replace many of the ageing and increasingly costly 0-6-0 saddle and pannier tanks with a new robust design evolved from the last of Dean's saddle tanks converted to panniers by Churchward (the successful and numerous 57XX class and the lighter 54/64/74XX tanks for branch passenger and freight work).

Collett was a very different character to Churchward. Although he'd had a privileged initial upbringing in the family home of Grafton Manor, he'd lost his elder brother when he was only ten, then his father died in 1884 when he was just thirteen and a pupil at Merchant Taylors public school. He was, perhaps because of this, a more private person, devoted to Ethelwyn, his wife, and he was greatly affected by the tragedy of her premature death at the age of forty-seven in 1923. He was never greatly involved in civic affairs though he was a magistrate for a number of years. He retained charge until over seventy and only retired under pressure from the GWR Board and government after his reluctance to permit conversion of much of Swindon's activity to munitions manufacture, a reflection of his experience of the impact of such work on the maintenance of GWR engines in the First World War.

Frederick Hawksworth

Collett eventually retired in 1941, handing over the reins to Frederick Hawksworth, a CME in waiting then already fifty-seven years of age. The latter had therefore little choice but to balance the need for the Works to become heavily involved in munitions production as decreed by the Board and look elsewhere for help with the massive freight requirement that developed during the war. He was able to continue the build of the GW 2-8-0s and met the Ministry of Transport demand to use Swindon's facilities to build the Stanier 8Fs, a design chosen for the international role that the Dean Goods 0-6-0s and the Robinson RODs had undertaken in the First World War. In 1943-4 he benefited from the short-term availability of 175 USA-built S160s prior to their shipment to the continent after D-Day, and later oversaw the temporary allocation of the Riddles WD 2-8-0s, which became permanent after nationalisation in 1948.

Hawksworth continued the modernisation of the shunting and branch fleet of saddle and pannier tanks, and although he retired a year after nationalisation, his 0-6-0 pannier tanks continued as part of the BR steam construction programme right up to 1956 (the 94XX, 15XX and 16XX classes). He died aged ninety-two in 1976.

Chapter 2

EARLY GREAT WESTERN SADDLE & PANNIER TANKS

The first two Great Western 0-6-0 tanks were designed by Gooch and built at Swindon in October 1860 for shunting in the Northern Division and were followed in 1864 by eight tanks built at Wolverhampton with double frames and a saddle tank covering the boiler but not the smoke- or firebox. Wolverhampton Works built a variety of large 0-6-0 saddle tanks then until 1910 and simultaneously some smaller ones, with Swindon also building saddle tanks between 1872 and 1904. There were a host of detailed differences between the classes. The saddle tank shapes varied from covering the boiler only, to boiler and smokebox, boiler and firebox or boiler, smoke- and firebox. Cabs could be open or enclosed. The earlier engines were double-framed. Wheel diameter ranged from 4ft 1½in to 5ft 2in. Wheelbase and front and rear overhangs varied.

After some specialist engines with pannier tanks were built around the turn of the century, the introduction of Belpaire fireboxes on some designs required a rethink on tank design, and one of the last five of the 2721 class built with Belpaire B4 boilers was equipped with short pannier tanks in 1904. Thereafter, large numbers of saddle tanks were converted to pannier tanks, mainly in the 1920s. Many then remained in service for a considerable number of years, although gradually replaced by Collett's standard 57XX class built from December 1928 onwards. A description will now be given of each of these many classes and sub-classes and illustrated wherever possible, with some indication of their operational sphere.

Nos. 93 & 94, 1860

The first two 0-6-0 tank engines built by the Great Western were built at Swindon in 1860, Gooch engines, with domeless boilers, raised fireboxes and Gooch valve gear. They had inside frames and two 15in x 22in cylinders, heating surface of 806.6sqft., grate area 10.14sqft., 4ft 2in diameter wheels and weighed 27 tons, 10 cwt. They had side

No.94 still in saddle tank form, at Bristol St Philip's Marsh, 29 March 1925.
(GW Trust/P.J. Reed Collection)

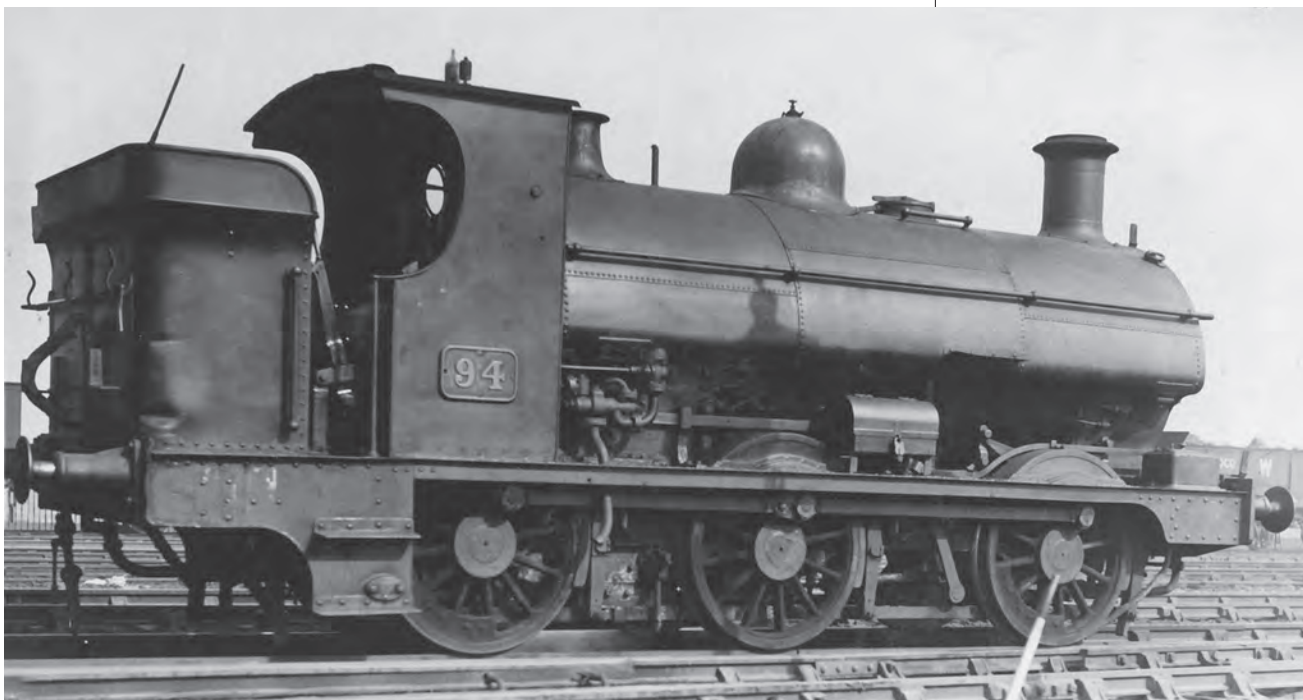

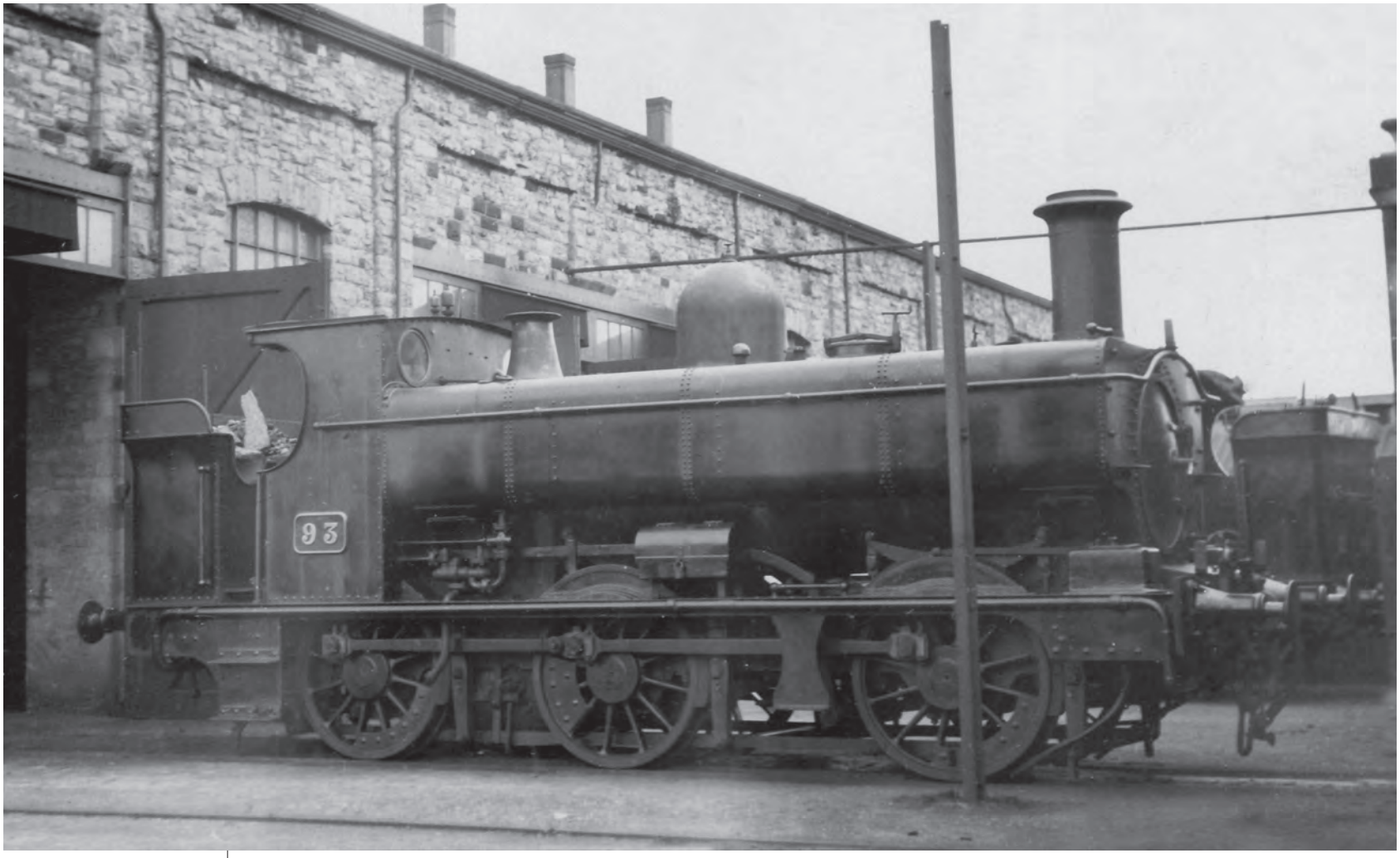

No.93 rebuilt as a pannier tank, at Swindon, c1925. (MLS)

and well tanks initially but were completely rebuilt at Wolverhampton in 1875 and 1877 as saddle tanks. Although built at Swindon, they spent their time in the Northern Division, at Chester (No.93) and Stafford Road (No.94) and ran approximately 200,000 shunting miles each there before rebuilding.

No.93 was rebuilt in November 1875, as a member of the 1874 built '850' class, its 15in cylinders replaced by 16in cylinders in 1892. Its saddle tank water capacity was just 568 gallons. Both were rebuilt with pannier tanks, 93 in July 1921 and 94 in March 1927. They then moved to Hereford (No.93) and Bristol followed by Swindon (No.94). However, their life as pannier tanks was short and they were withdrawn in February 1931 and July 1932 respectively.

'302' class, 1864-65 (Nos. 302-309)

Eight double-framed saddle tanks were built in 1864 and 1865 at Wolverhampton Works to the design of Joseph Armstrong. The saddle tanks covered only the boiler itself leaving smokebox and firebox clear. The boilers were domeless and firebox and chimney were Gooch designs. The two inside cylinders measured 16in x 24in, total heating surface was 1,204.36sqft, grate area was 13.6sqft and the wheels were 4ft 6in diameter. The tank capacity was 1,000 gallons and the engine weighed 35 tons, 13 cwt. 303 acquired 17in cylinders in 1878 and the others followed suit. The wheel

diameter was later increased to 4ft 7½in to standardise components and open cabs were fitted from the early 1880s onwards.

No.305 was rebuilt with a Dean boiler in 1882 and the tank capacity was enlarged to 1,140 gallons. The other engines were similarly rebuilt between 1887 and 1893, although they had full length saddle tanks of 1,000 gallons capacity. The dimensions of the rebuilt engines, where different, were: 17in x 24in cylinders, enlarged heating and grate area surface of 1,347.39 and 17.33sqft respectively, boiler pressure of 150 lbs psi, giving a tractive effort of nearly 16,000 lbs.

They were further rebuilt between 1901 and 1908 with a back dome type of boiler (S4 type) and new tanks. 302 was withdrawn in 1918 as a saddle tank, but the others were all rebuilt with pannier tanks between 1911 and 1923, although 307 reverted to saddle tank mode between 1922 and 1927 when it again acquired pannier tanks. The pannier tanks had 1,000 gallons capacity. Two of the class – 305 and 306 – were equipped with Belpaire fireboxes in 1912-3. From 1922, larger 'Dean Goods' type boilers were fitted and dimensions again altered, decreasing the heating surface to 1,197.7sqft and grate area to 15.45sqft, but with increased boiler pressure of 165 lbs psi, increasing the tractive effort to 17,525 lbs. Three (305-307) received superheated 'Dean Goods' boilers between 1925 and 1927 slightly varying the heating surface and increasing the weight to 45 tons 5 cwt. 303/5-7/9 were fitted with enlarged bunkers and all except 309 with enclosed cabs. These engines, by then over sixty years old and still on the original frames, were otherwise much rebuilt and each engine was almost unique for periods between 1900 and 1927.

They were clearly valued as shunting engines, 302 spending its time in Bristol and Taunton, being withdrawn relatively early (it was still 54 years old), whilst the others performed mainly in South Wales, with two each at Newport, Pontypool Road and Tondu, and one at Landore in 1905. By 1922, they were more dispersed in South Wales, with Pontypool still having two, but the rest were in Newport, Severn Tunnel, Llanelli and Milford Haven and later even more

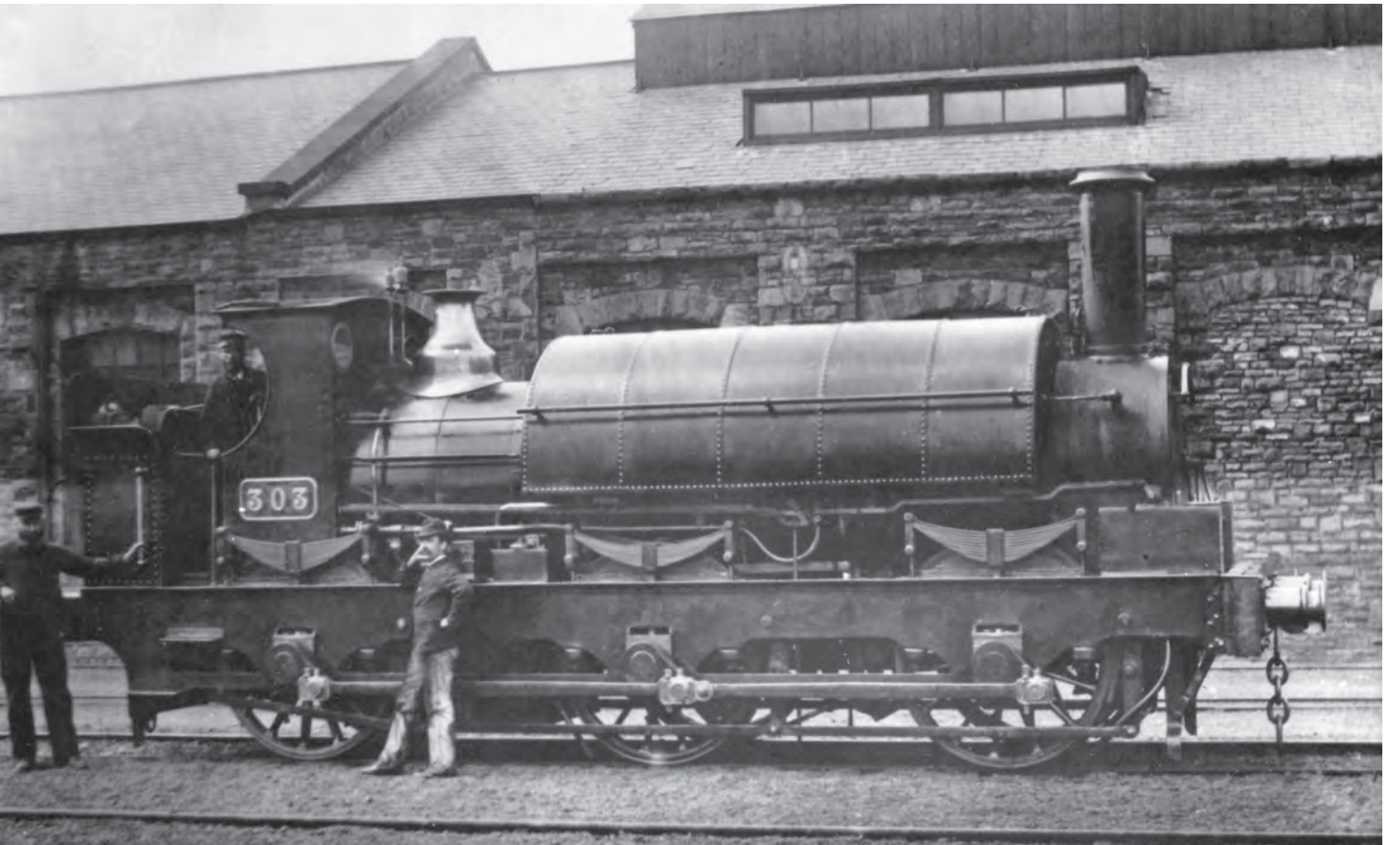

The double-framed saddle tank No.303 of the 1864 built '302' class, with the original short form of saddle tank leaving the smokebox and firebox uncovered, before rebuilding with Dean boiler and full-length saddle tank in 1890, c1888. (MLS)

307, built in 1865 and equipped with a spark arrester for marshalling wagons from the Royal Ordnance Depot and Provender Building at Didcot, during the period (1922-1927) when it reverted to saddle tank form after having been converted to a pannier tank in 1916. It was eventually withdrawn in May 1931 after an active life of sixty-six years. The Provender Building is the backdrop which stored the feed for all the GWR's horses used for shunting and road van distribution throughout the company. (GW Trust/P.J. Reed Collection)

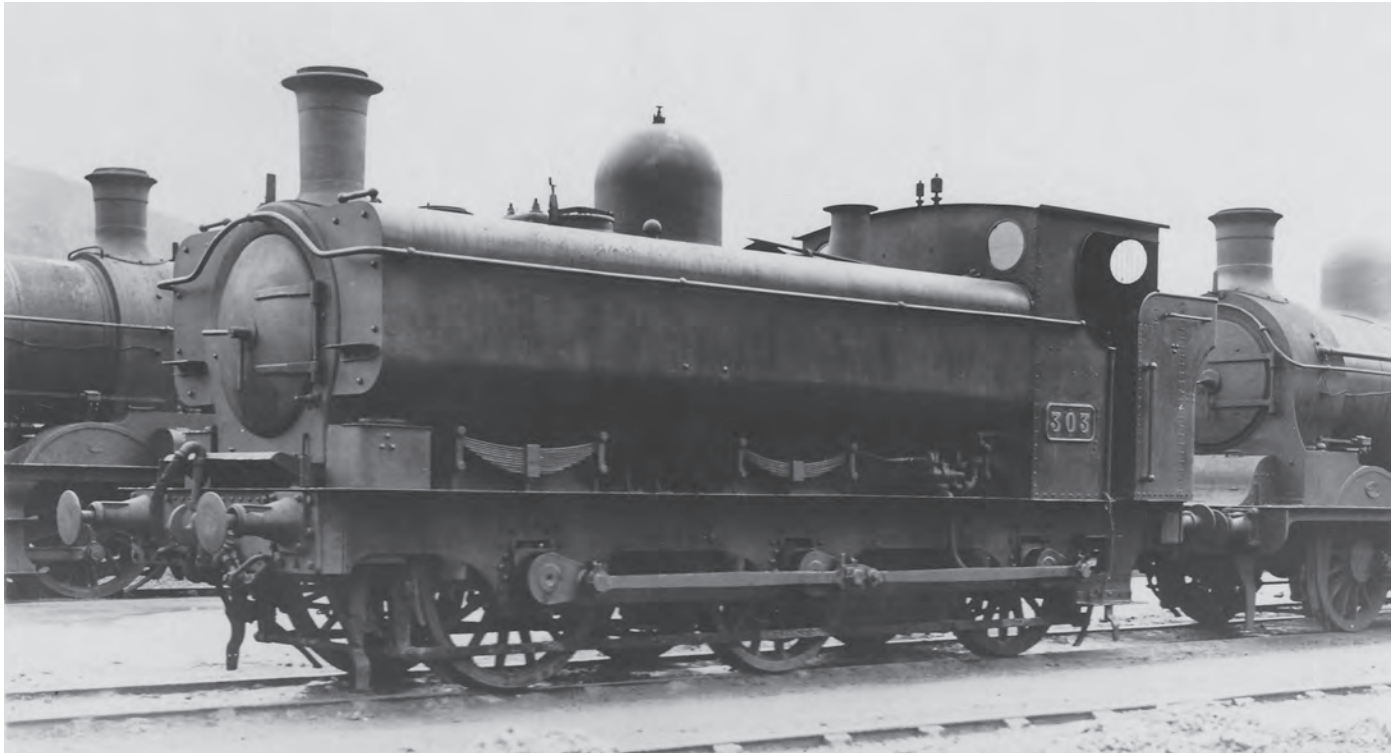

No.303 again but after conversion as a pannier tank in January 1923, with former Welsh company engines at Cardiff West Side Yard, c1927. 303 was withdrawn in July 1932. (MLS)

spread with individual engines at Aberaeron, Llanelli, Bridgend and Ebbw Junction, but three had flown further afield to Yeovil, Didcot and Oswestry and were not withdrawn until 1928-32. No.306 was recorded once on a passenger turn involving over 150 miles in the Newport-Gloucester-Swindon area after the failure of a tender engine. All except 302 exceeded a million miles in traffic, with 306 the highest at 1,172,973, it and 303 achieving a 68 year life.

'1016' class, 1867-71 (Nos. 1016-1075)

This class of double-framed saddle tanks was a tank version of the 'Standard Goods' of Joseph Armstrong, designed by his brother, George Armstrong, then in charge of the Wolverhampton Works. The first one, numbered 238, was built at Wolverhampton in February 1867, but was renumbered 1016 in August. 1017 to 1027 were completed the same year, and a second batch, 1028-1039 followed, the last of the order completed in March 1868.

Somewhat like Joseph Armstrong's '302' class, they had short saddle tanks over the boiler, smokebox and flush-topped firebox uncovered. They had little driver protection, just a stand with spectacle plates. They were fitted with wooden brake blocks. Tank capacity was 880 gallons and the engine weighed 37 tons with a maximum axleload of 13 tons over the leading axle. Like the '302s', they had 4ft 6in diameter wheels, but a larger grate area, 16.25sqft, and 1,137sqft heating surface. Boiler pressure was 140 lbs psi and tractive effort was 13,540 lbs.

They obviously fulfilled a basic need as the class was expanded rapidly with 1040-1075 being delivered in 1870 and 1871. Thirty-five were based in South Wales, with the main groups being at Newport, Cardiff, Aberdare and Landore. Although built at Wolverhampton to standard gauge, some twenty-two were allocated to standard gauge lines in the

1021 as built in May 1867 with short saddle leaving the smoke- and firebox uncovered. It was rebuilt as a pannier tank in 1924 and withdrawn from Merthyr shed in August 1932 having amassed 1,224,832 miles, the most of the class. It is seen here at Wolverhampton Works, c1900. (GW Trust/ P.J. Reed Collection)

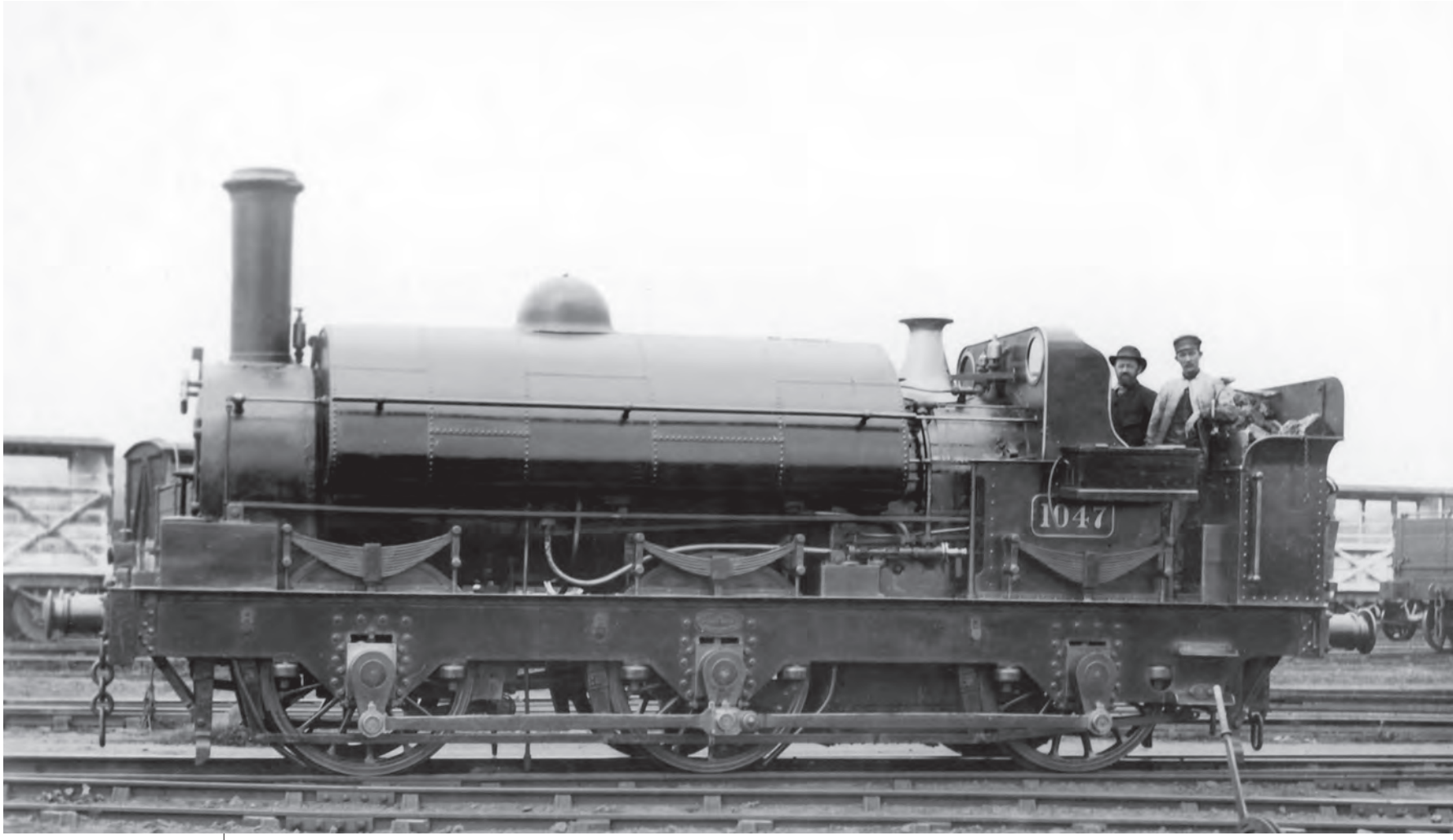

Saddle tank 1047 as built in September 1870, also with short saddle tank and before proper cab protection was provided, c1880. It was rebuilt as a pannier tank in 1912 and withdrawn from Stafford Road in 1935, having run 1,114,942 miles in traffic. (GW Trust/P.J. Reed Collection)

London, Bristol and Worcester motive power districts. A further fourteen followed by the mid-1880s as conversion of broad to standard gauge took place. A large class of Swindon built saddle tanks followed in the mid and late 1870s (the 'Buffalo' class) to augment the number of shunting engines available over the whole system.

By 1880, the engines had acquired open cabs, but the Southern Division engines had a changed appearance, gaining Dean chimneys, brass dome covers and fenders on the bunkers. 17in cylinders were fitted after 1880 and the wheel diameter increased to 4ft 7½in, through the provision of thicker tyres. Boiler replacement and improvement took place, mainly at Swindon Works, between 1887 and 1895 and 1052 received a larger 1,064 gallon tank. The rebuilding increased the heating surface to 1,347. 39sqft, boiler pressure was increased to 150 lbs psi and weight increased to 43 tons 2 cwt. The rebuilt saddle tank was slightly more powerful with a calculated tractive effort (at 85 per cent) of 15,935 lbs. The 1892-5 rebuilds of eight engines had raised fireboxes (1031/38/41/48/57/60/61 and 1065). After 1900, boilers were pooled and frequently interchanged.

Pannier tanks were introduced to the class in 1911 and by 1926 (just a few years before their demise) all bar eleven (1020/25/29/32/35/40/43/63/67/68 and 1074) had been equipped with pannier tanks holding 1,000 gallons of water. New Belpaire boilers were fitted to some of the pannier tanks,

altering the dimensions, reducing the heating surface to 1,141.7sqft and grate area to 15.57sqft. Other boilers fitted provided 1,197.7sqft of heating surface but with 165 lbs psi pressure increasing the tractive effort to 17,525 lbs and increasing the engine weight to 45 tons 12 cwt. New enlarged bunkers were fitted to some and roofed cabs were provided to 1016/18/19/21/24/28/33/37/40-42/45/51/52/61/65/ 66 and 1071. 1040 and 1061 were tanks with enclosed cabs with back plates.

By 1922, the class had spread throughout the GWR territory with South Wales still having the bulk (thirty) but Wolverhampton had gained four, Shrewsbury, Oswestry and Tyseley three each, and the rest were in ones and twos throughout the system. In the late 1920s and early 1930s, as withdrawals came fast, they penetrated the former Cambrian system with individual engines based at Portmadoc, Machynlleth and Aberystwyth as well as Oswestry.

Apart from four saddle tanks condemned between 1910 and 1914, all survived into the post 'Grouping' era, and the forty-nine converted to pannier tanks survived until the new 57XX pannier tanks were constructed in large numbers in 1929/30. Surprisingly, the remaining seven saddle tanks of the class also survived to 1928, although none lasted to the 1930s. The last pannier tank survivors, 1045 (at Shrewsbury) and 1047 (at Stafford Road), were not withdrawn until January and July 1935 respectively and all bar the four saddle tanks withdrawn before the First World War exceeded a million miles in traffic, with 1021 (spending much of its career at Aberbeeg and Merthyr) withdrawn in August 1932, the highest at 1,224,834 miles.

1029, rebuilt with full length saddle tank, on a passenger train at Shrewsbury, c1900. It was one of the early withdrawals in December 1910 from Oswestry depot. (GW Trust/P.J. Reed Collection)

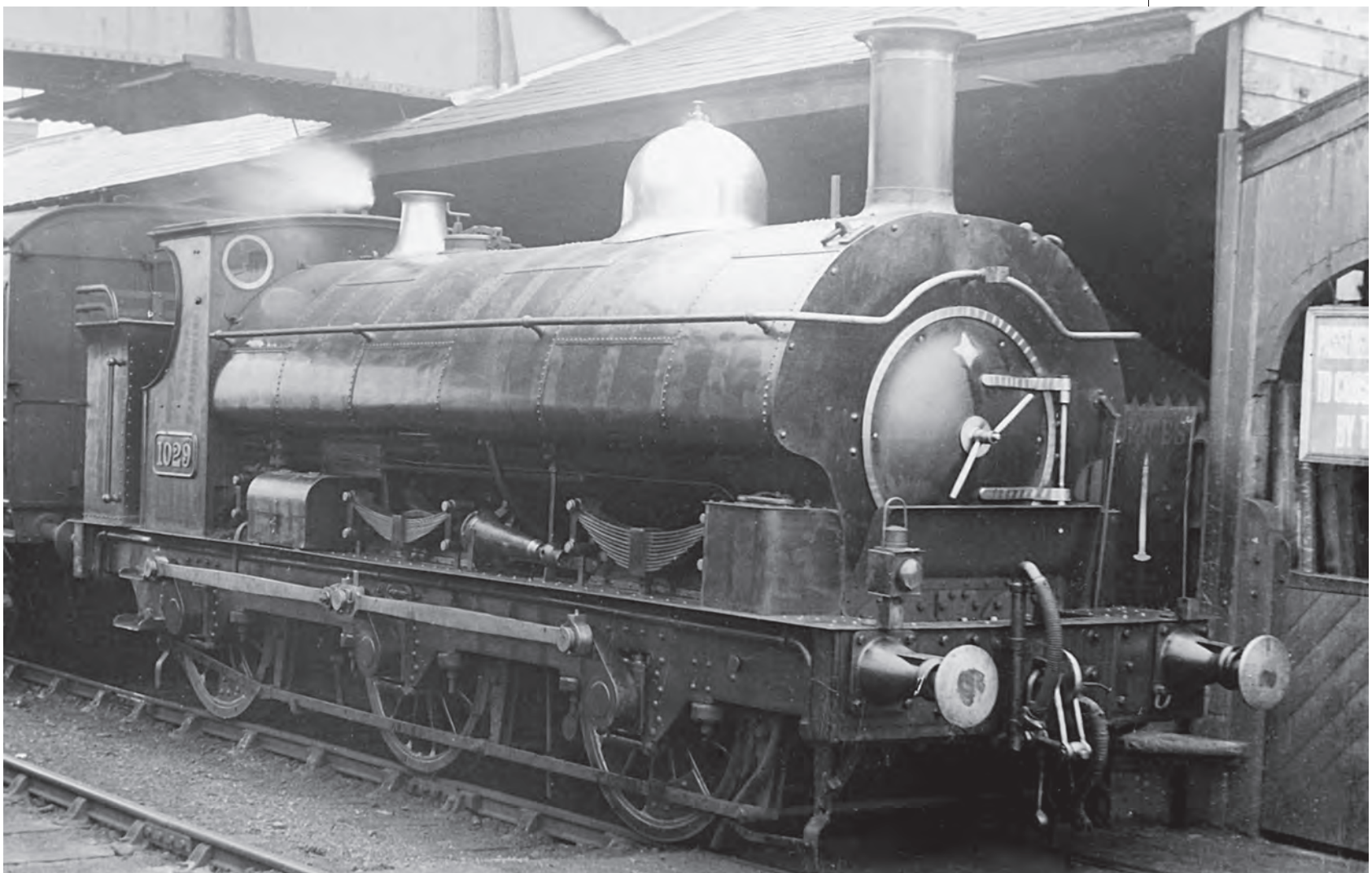

1020, built in April 1867, which remained a saddle tank until its withdrawal in 1928, on a passenger train in the Merthyr area, c1925. (MLS)

Saddle tank 1033, built in December 1867, and rebuilt as a pannier tank in 1925, awaits its next duty stabled at Cheltenham, c1910. (GW Trust/P.J. Reed Collection)

Saddle tank 1045 at an unknown location on a passenger train, c1905. 1045 was rebuilt as a pannier tank in 1916 and withdrawn from Shrewsbury in 1935. (GW Trust/P.J. Reed Collection)

1052, built in November 1870 at Wolverhampton, waiting at Cardiff General with a local passenger train, c1924. It had been rebuilt with pannier tanks in August 1923 and was withdrawn in September 1929. (John Hodge Collection)

1061, built at Wolverhampton in March 1871, rebuilt with pannier tanks and enclosed cab in June 1925, withdrawn in March 1932, c1928. (MLS)

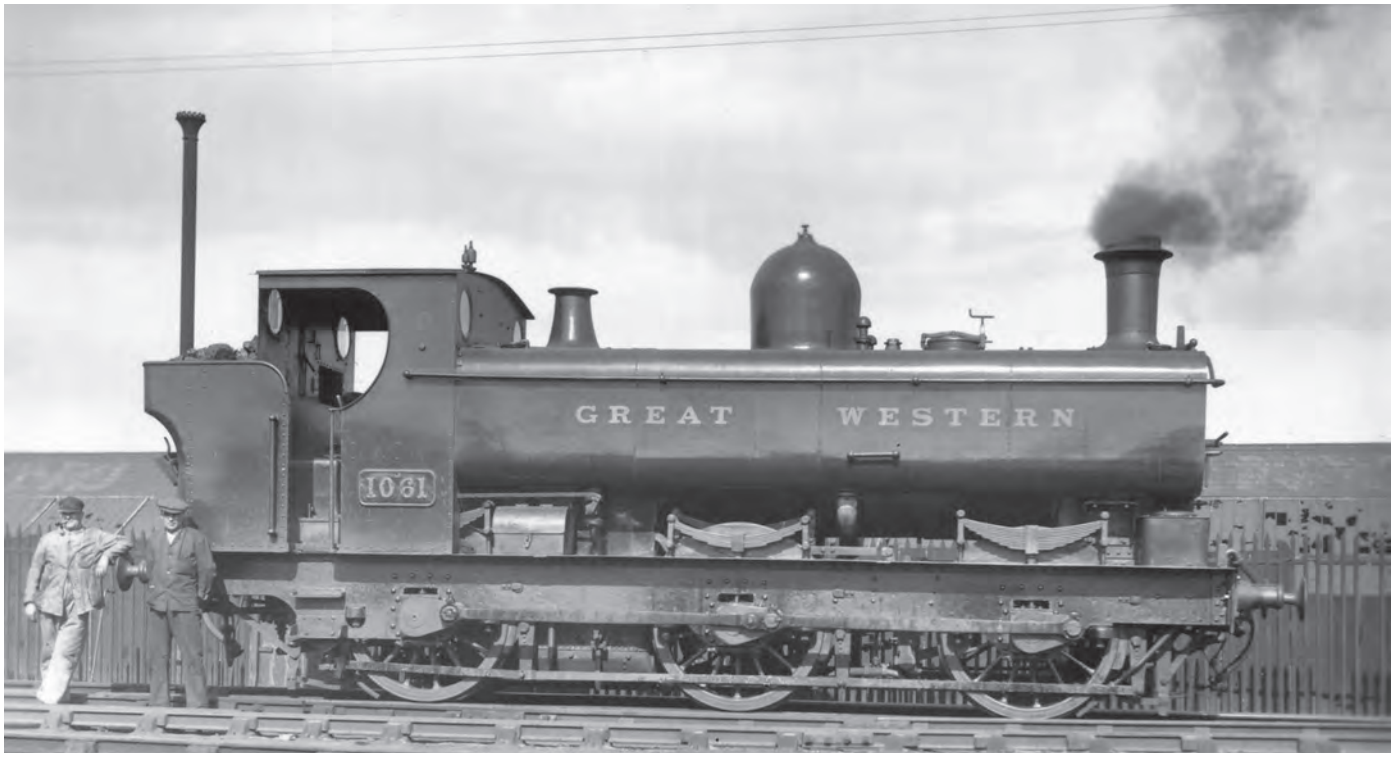

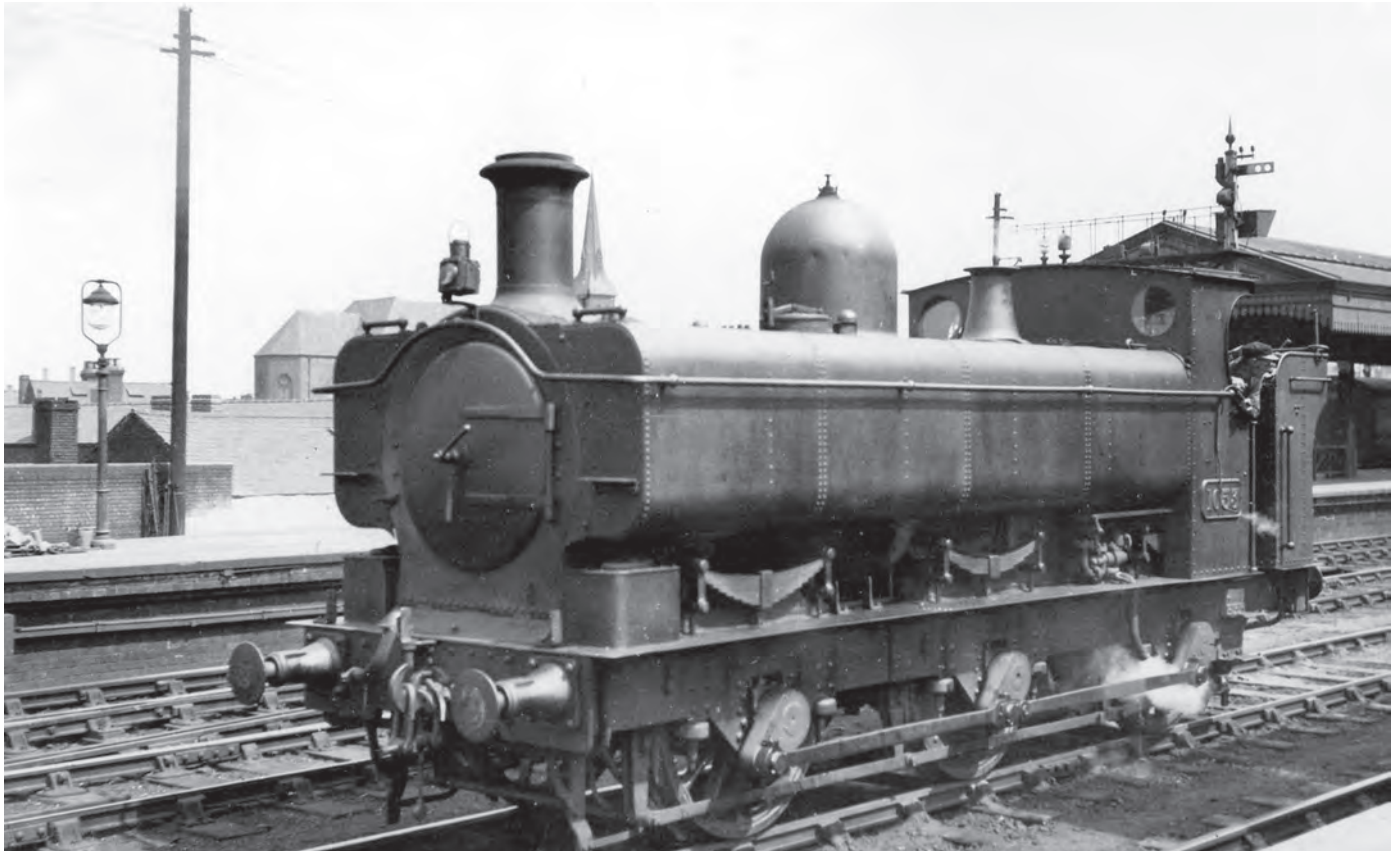

1053, built in November 1870 and rebuilt with pannier tanks in 1918 at its final home base of Worcester, c1928. It was withdrawn in 1931. (GW Trust/P.J. Reed Collection)

'1076' class, 'Buffalo', 1870-81 (Nos. 1076-1081, 727-756, 947-966, 1134-1153, 1166-1185, 1228-1297, 1561-1660)

The largest group of Great Western double-framed saddle tanks were the 266 locomotives of the '1076' class, nicknamed the 'Buffalo' class, built to the design of Joseph Armstrong and constructed at Swindon Works between 1870 and 1881, well into the Dean superintendency. Although identified as one class, they were originally designated as five different classes, the '1076' class of just six locomotives built in 1870, the '727' class of fifty engines built between 1872 and 1874, the '1134' class of forty engines (1874-5), '1228' series of seventy engines (1877-8) and finally '1561' class of a hundred locomotives delivered between 1879 and 1881. After reboilering in the Dean era and most rebuilt with pannier tanks in the Churchward and Collett regimes, they were sufficiently similar to be classified together, though known by the number of the first 1870 built engine and nicknamed after the first of the '1134' series which received the official name *Buffalo* which it carried on nameplates on the sides of the saddle tank until it was rebuilt as a pannier tank in May 1914.

Like the Wolverhampton built '1016' class, they were a tank engine version of Joseph Armstrong's 'Standard Goods' 0-6-0, the Swindon built engines being identified as different from the '1016' class mainly by the shape of the outside framing which was cut out between the trailing horns and cab footsteps, whereas the '1016' class had solid frames throughout. The six 1870

1134 *Buffalo* at Cardiff, posed with local staff in 1892. 1134 was built in November 1874, was rebuilt with pannier tanks in May 1914 when it lost its name and was withdrawn in November 1934. (MLS)

engines were originally built with side tanks and frames extending 5ft 2in behind the trailing axle but were later rebuilt with new boilers and saddle tanks, 1077 being the last to be converted in 1902. The fifty engines of the '727' class, numbered 727-756 and 947-966 were built with short saddle tanks that left the smokebox uncovered and had frames extending 6ft beyond the trailing axle. The '1134' class had full length saddle tanks and frames extending 6ft 9in to the rear. The '1228' series had heavier boilers and side sheets on the footplate panels and the '1561' series were the first fitted with cabs. Ultimately, all had the full-length saddle tanks and various boilers (all interchangeable) from the Dean era.

Initially the cabs were primitive, just a backplate protecting the crew, then 1561 and successors of the series built from 1879 had extended cab roofs. Ultimately, 120 locomotives received enclosed cabs although not until 1924 through to 1927, only two or three years before the first withdrawals of the pannier tanks took place (individual numbers receiving this type of cab are indicated in the appendix). Although most were built as standard gauge engines, ten (1228-1237) were constructed in 1876 as broad gauge locomotives and a further twenty were built as 'Convertibles' in 1879 (1561-1580) and twenty more (1238-1257) were rebuilt as 'Convertibles' between 1884 and 1887, all for use on the remaining broad gauge lines west of Newton Abbot. All were of course converted back to run on standard gauge lines after the last broad gauge section in Devon and Cornwall was replaced in May 1892.

As built, the locomotives had two 17in x 24in inside cylinders, 4ft 6in diameter wheels, boiler pressure of 140 lbs psi, total heating surface of 1,160sqft. and grate area of 16.85sqft. They weighed just 37 tons 14 cwt, with a maximum axleload of 12 tons 14 cwt, had water tank capacity of 850 gallons and a calculated tractive effort (at 85 per cent) of 15,285 lbs. For their day, they packed a powerful punch and their success undoubtedly led to their large scale manufacture. After reboilering and equipping with full length tanks with capacity ranging from 1,020 to 1,100 gallons, wheel diameter was increased slightly to 4ft 7½ in,

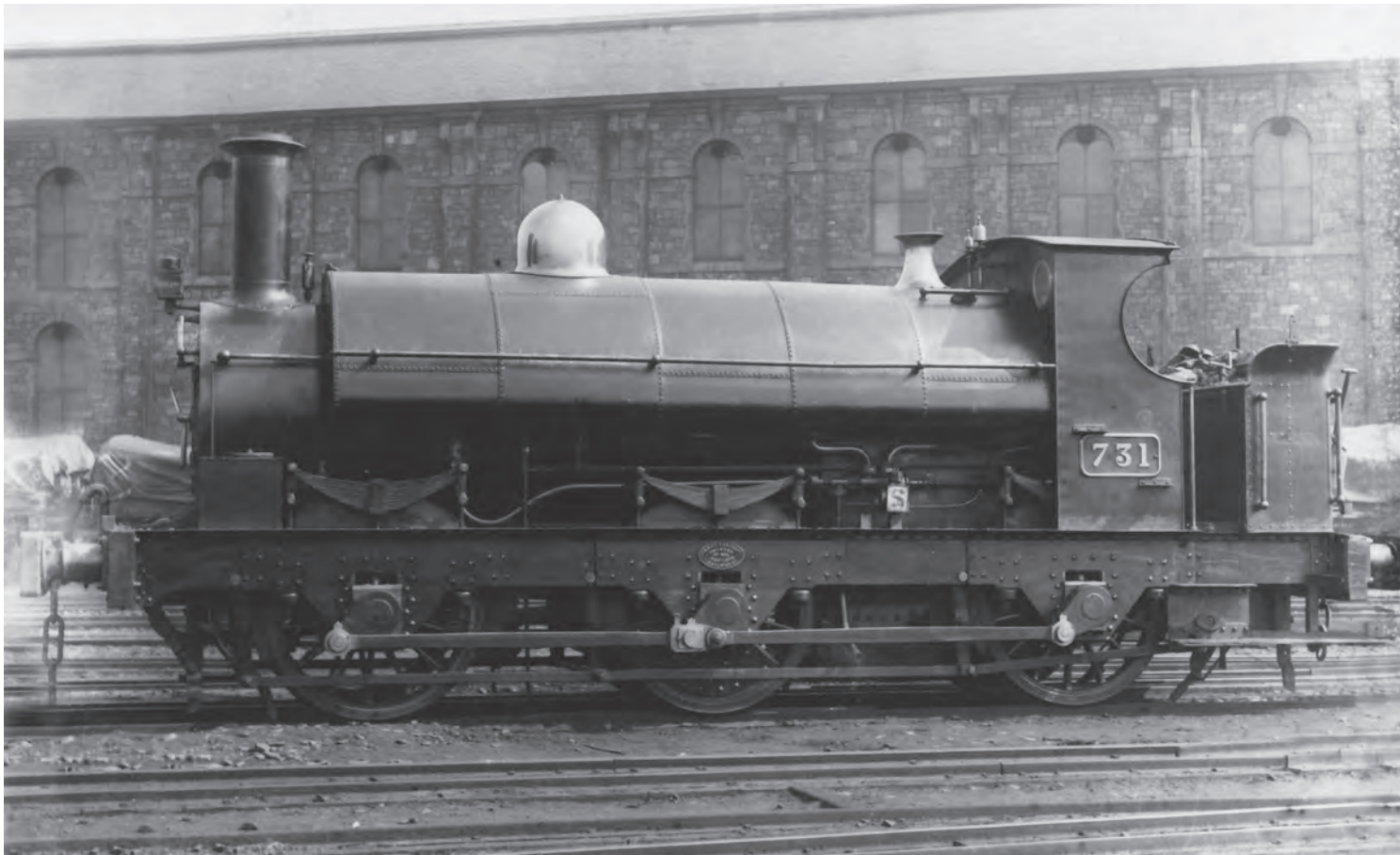

Saddle tank 731, built in November 1872 and rebuilt as a pannier tank in 1921, c1900. (GW Trust/ P.J. Reed Collection)

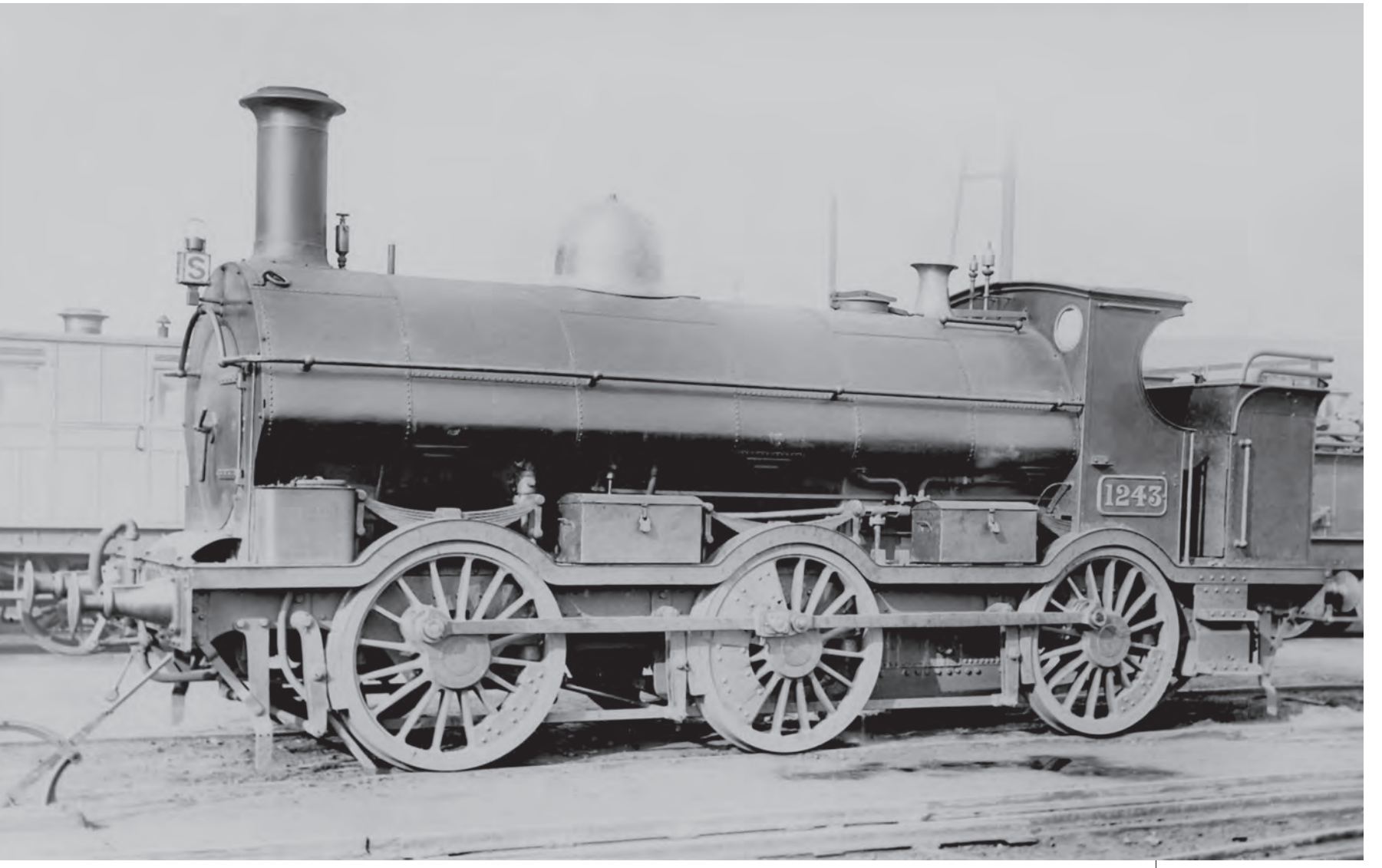

boiler pressure raised to 150lbs psi, and weight increased to 43 tons 10 cwt, the axleload then over 14½ tons. During the reboilering, several variations were used which were subsequently interchangeable between the locomotives – the types used were the Swindon S2 (54 examples), S2/3 (9), W3 (3), R3 (1), and S4 (199 examples). The rebuilding took place between 1888 and 1902.

The use of boilers with Belpaire fireboxes commenced in 1911 and it was then found necessary to replace the saddle tanks with pannier tanks holding 1,000 gallons of water. The Belpaire boilers (classified B2 or B4) were ultimately fitted to 223 of the 266 engines, the remainder retaining the S2 and S4 boilers. Boiler pressure was raised to 165 lbs psi, weight increased to 43 tons 18 cwt and tractive effort was raised to 17,525 lbs. Full dimensions are given in the appendix. Some engines received boilers with top feed and a few engines were equipped with spark arrester chimneys for working in sidings where there was fire risk, including the Provender Store and Ordnance depot at Didcot. Twenty-one engines were fitted at one stage for auto-train working.

1243 built in 1877, rebuilt as a 'Convertible' in 1884 for use on the broad gauge in the Newton Abbot motive power division, at Swindon, c1892. It resumed standard gauge working after the broad gauge track was finally lifted and was converted to a pannier tank in 1913. (GW Trust/P.J. Reed Collection)

'Buffalo' class saddle tank No.1285, built in January 1878, hauling a passenger train on the Liskeard-Looe branch, c1912. It was rebuilt with pannier tanks in March 1919 and withdrawn in December 1934. (MLS)

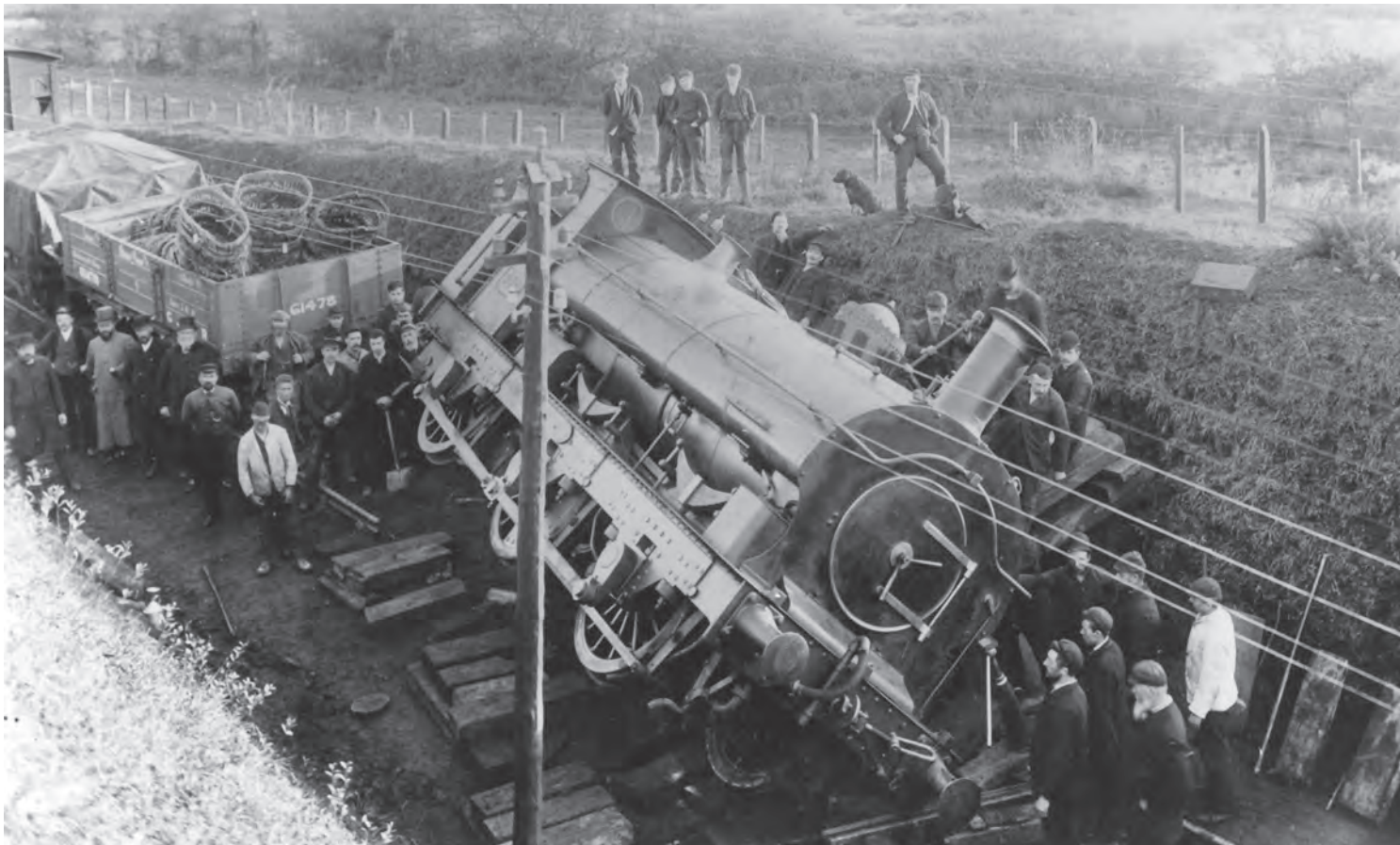

Saddle tank 740, built in January 1873, derailed whilst hauling a freight train at an unknown single track location, c1900. (GW Trust/P.J. Reed Collection)

Saddle tank 1234 hauling three auto trailers, thought to be in the West Midlands, c1920. 1234 was rebuilt as a pannier tank in 1928. (GW Trust/P.J. Reed Collection)

Seventy-seven were fitted with the GW ATC equipment in 1930-1 despite the fact that many of the class were being withdrawn around that time.

Although built primarily for shunting and short freight trip work, they were in fact used for a wide variety of duties including passenger branch and main line stopping passenger trains. Being Swindon as opposed to Wolverhampton built and maintained, their work bias was in the south of the Great Western, especially in the Newton Abbot, Bristol, Gloucester, Worcester, South Wales and London Districts. A significant number were in the Newport and Neath Districts in South Wales and in addition to the types of work already mentioned, were noted on some quite substantial long-distance mineral train haulage including Aberdare to Swindon via Gloucester, Aberdare to Salisbury via the Severn Tunnel, Pontypool Road to Wolverhampton via Worcester and Tondu to Neyland. Just a dozen were noted at Northern Division depots such as Oswestry and Croes Newydd. With their light axleweights, the GW route availability code was the universal 'yellow' which meant few limitations.

In 1905, the Newport Motive Power District had the largest number with 111 examples, with thirty-seven based at the Newport sheds and twenty-three at Cardiff, sixteen at Tondu and fourteen at Pontypool Road; the Neath District had forty-eight, so 60 per cent of the class were based in South Wales, the other main concentrations being in Bristol and Newton Abbot sheds. The London District had twenty-seven engines evenly spread and only the Wolverhampton District had less than ten.

In 1922, by which time a significant number had been converted to pannier tanks, South Wales again dominated with Newport and the Eastern and Western Valleys leading – twenty at the Newport depots, thirteen at Aberbeeg and ten at Pontypool. Tondu had twenty for servicing the Llynfi, Garw and Ogmore Valleys and Duffryn Yard had ten for the same area. Outside South Wales, the main concentrations were at Old Oak Common (eleven), Laira (ten) and Bristol (eight). To give an idea of their versatility, sixty-five GW sheds and sub-sheds owned a 'Buffalo' that year. At the end of the 1920s, just before significant withdrawals took place, the class could still be found at fifty-seven depots with Newport, Aberbeeg and Pontypool having forty-five between them, Tondu and Duffryn Yard twenty-two and the Llanelli/Neath sheds, nineteen. In the rest of the GWR, Bristol had thirteen, Laira ten, Exeter and Westbury eight each, and Old Oak Common still had eleven. Sheds which owned just one example included Milford Haven, Goodwick, Ross-on-Wye, Kidderminster, Leamington, Stafford Road, Abergavenny, Oswestry, Oxley, Leominster, Hereford, Wells, and Truro.

The first withdrawals occurred between 1903 and the First World War, but thereafter most were rebuilt as pannier tanks and withdrawals did not restart in earnest until 1927. The majority were then withdrawn over the following five years as they were replaced by Collett's 57XX class, but a number lingered on to the late 1930s and three were reprieved at the onset of the Second World War (1287, 1585 and 1624), and were not withdrawn until April 1946. 1287 was first used as a stationary boiler at Newbury, then at Leamington and was not cut up until 1953. In view of the usefulness and uniqueness of this type of locomotive, it is a pity that all were withdrawn before preservation was envisaged, especially in the saddle tank form. Mileages achieved were high for shunting engines, although with the variety of work they were called on to perform and their longevity, it is perhaps not surprising that most exceeded a million miles in traffic, with the highest recorded – 1,253,653 – ascribed to No.738 built in 1873 which had started life at Paddington and was withdrawn from Landore in 1936.

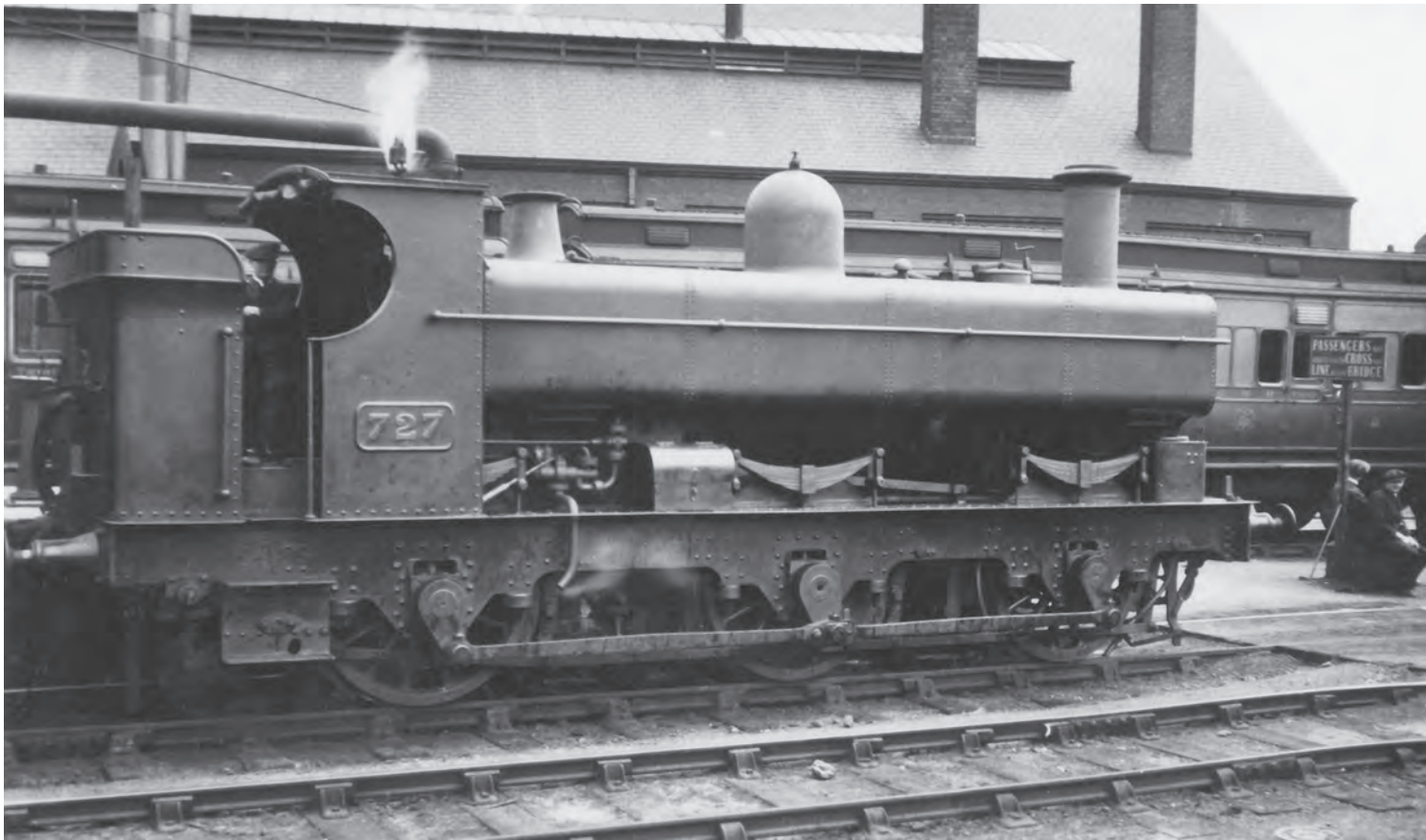

727, the first of the series, built in October 1872 and rebuilt with pannier tanks in July 1922. It was withdrawn from Carmarthen in December 1929. (GW Trust/P.J. Reed Collection)

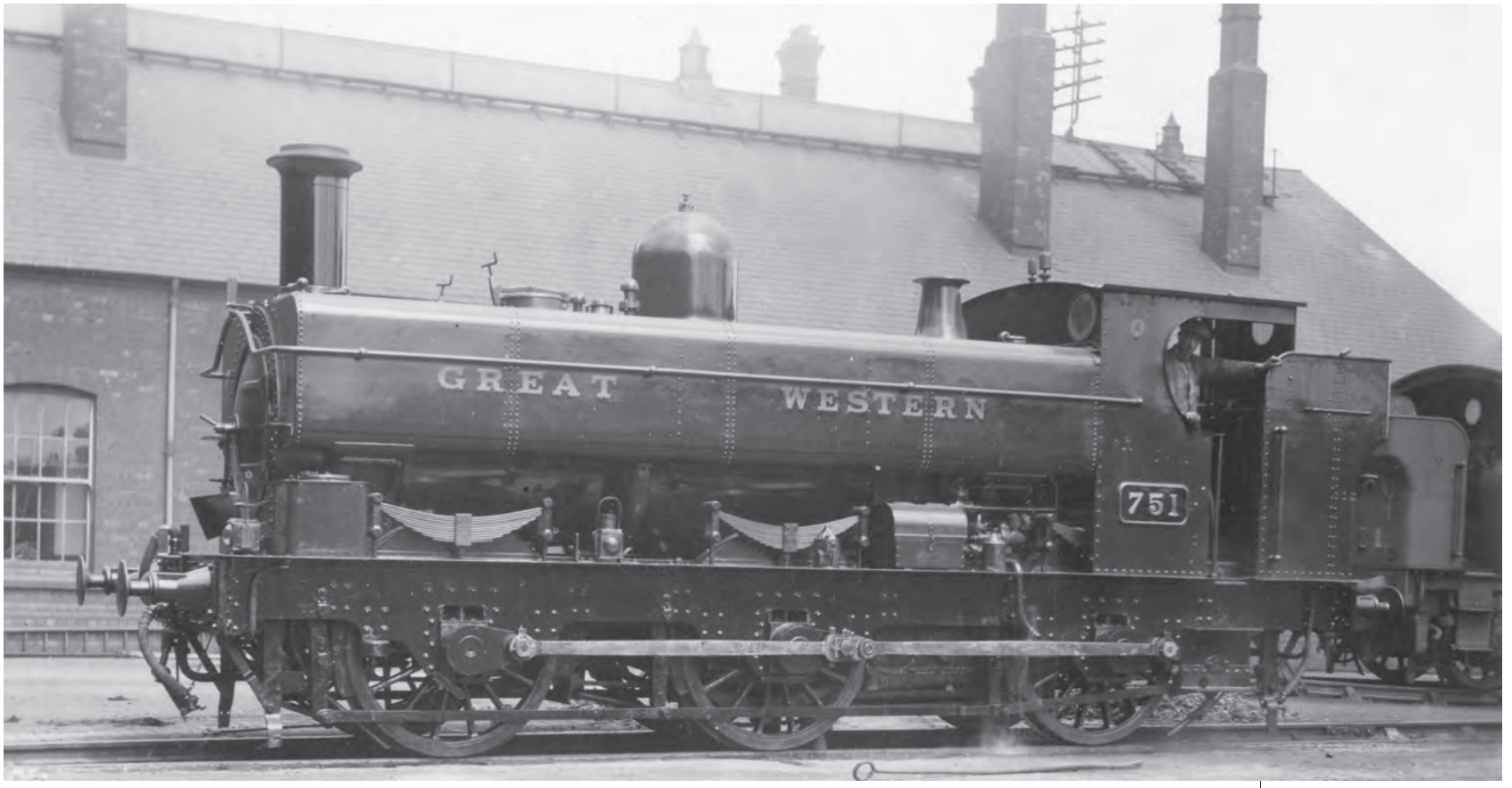

751, built in March 1873 and rebuilt with pannier tanks in April 1915, at Swindon after equipping with enlarged bunker and enclosed cab, c1924. (GW Trust/P.J. Reed Collection)

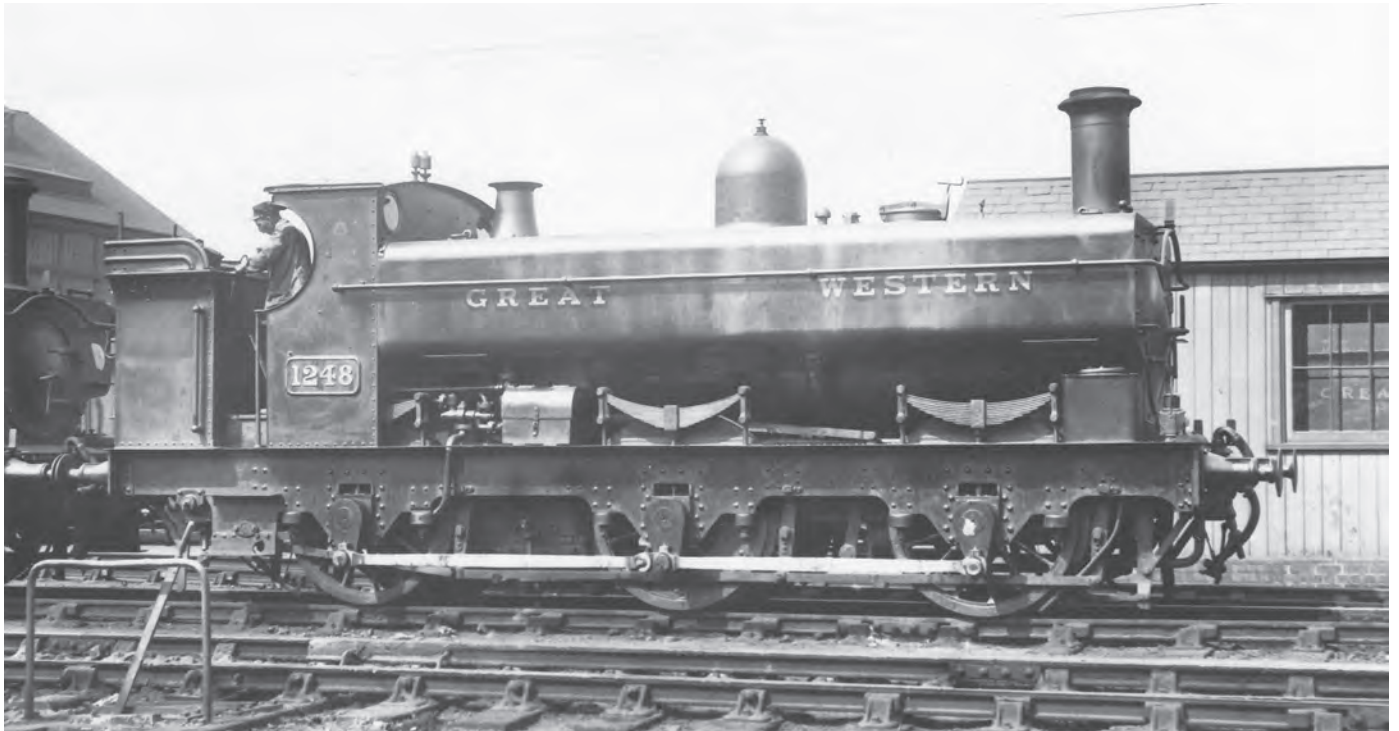

1248, built in March 1877, and rebuilt with pannier tanks in February 1916, with open cab and original shaped small bunker, c1923. It was withdrawn in May 1931. (MLS)

1650, built in February 1881, rebuilt with pannier tanks in October 1926 and enclosed cab and enlarged bunker at the same time, at Swindon shortly before withdrawal, March 1938. (MLS/W.L. Good)

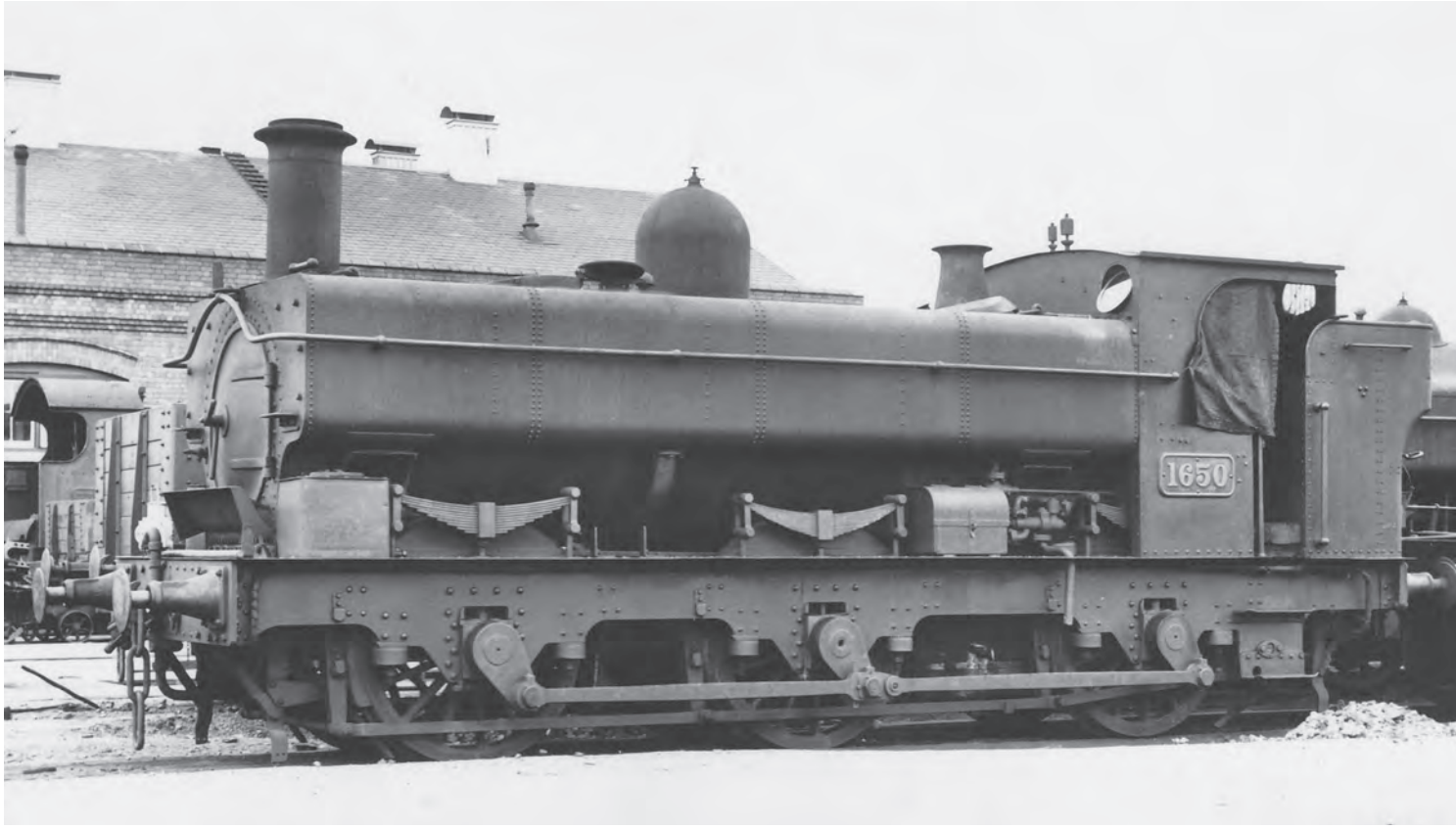

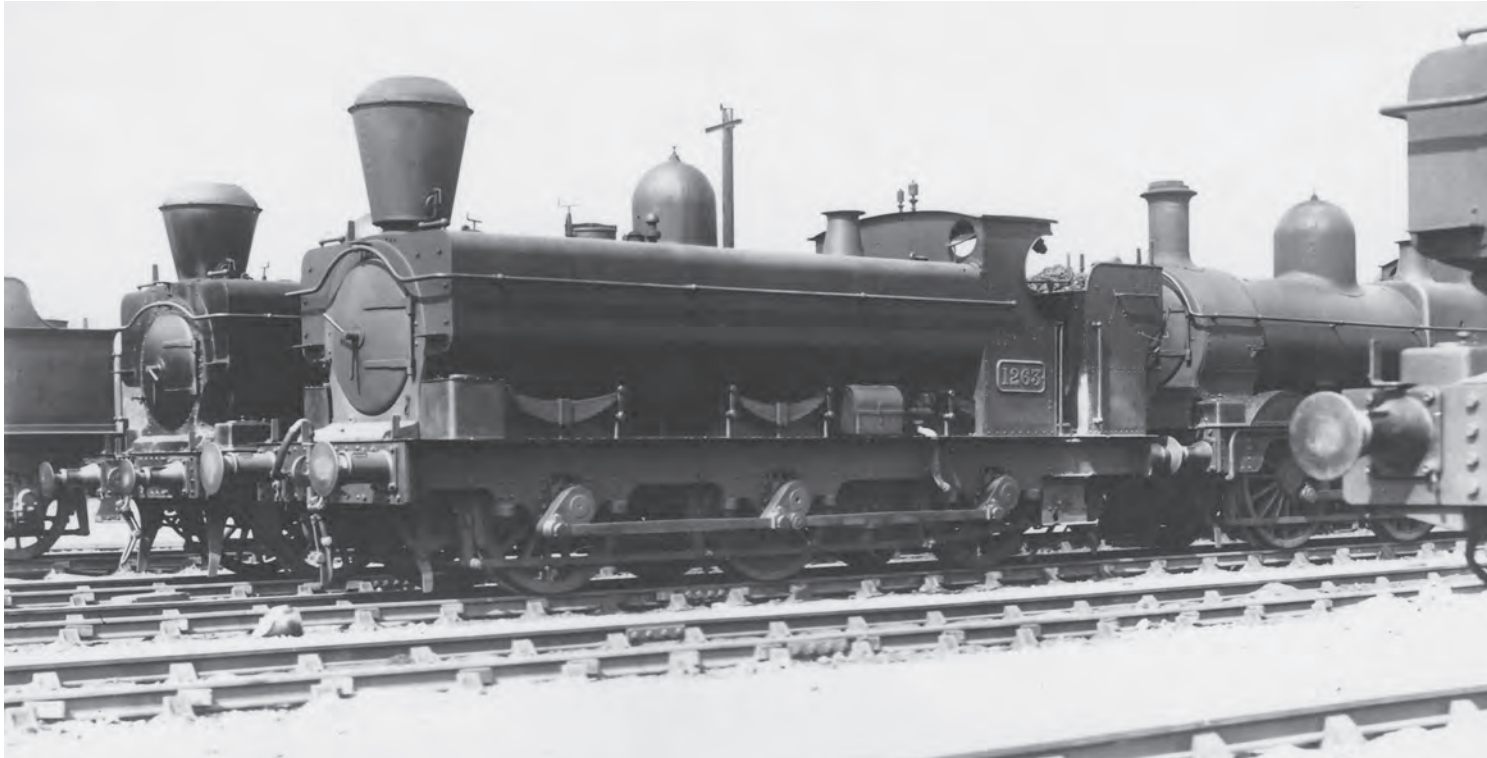

1263, built in June 1877, rebuilt with pannier tanks in March 1920 and fitted with a spark arresting chimney for use in the Ordnance depot sidings at Didcot, seen here on shed with another spark-arrester fitted, '1076' and a Dean Goods, c1930. 1263 was withdrawn in January 1934. (MLS)

Didcot's 1263, built in1877, rebuilt as a pannier tank in March 1920, with spark arrester chimney. It was condemned in January 1934. (GW Trust)

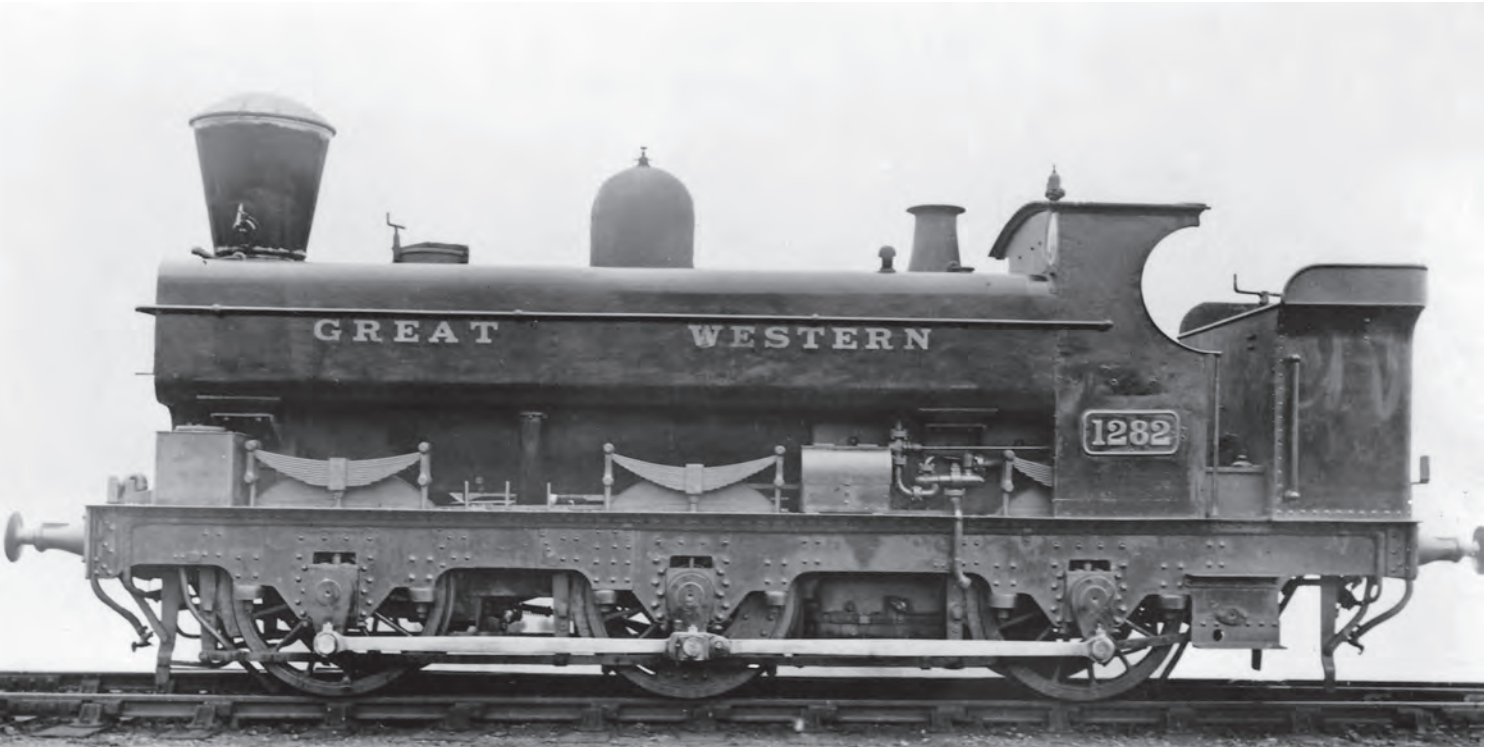

1282 built in 1877, rebuilt with pannier tanks in April 1916, and equipped with a spark-arresting chimney. It still has an open cab, so the photo was taken before1924 when it received an enclosed cab and enlarged bunker. (MLS/F. Moore)

1147, built in January 1875 and rebuilt as a pannier tank in 1923 on a freight in the West Midlands, c1927. 1147 was withdrawn from Tyseley in 1931. (GW Trust/ W.L. Good)

1271 on an auto train at Plymouth North Road, 11 July 1925. 1271 was built in September 1877 and converted to pannier tank form in 1921. (GW Trust/P.J. Reed Collection)

1570, built in 1879 and rebuilt as a pannier tank in 1912, at Tavistock with a branch auto train for Plymouth, c1925. (GW Trust/P.J. Reed Collection)

1600, built in November 1879 and rebuilt as a pannier tank in 1924, in an auto train 'sandwich' at an unknown location, c1930. It was withdrawn from Pontypool Road shed in 1937. (GW Trust/P.J. Reed Collection)

1610, built in 1880, rebuilt as a pannier tank in 1927 and equipped with a spark arrester chimney, shunting at Didcot, 21 April 1934.
(GW Trust/P.J. Reed Collection)

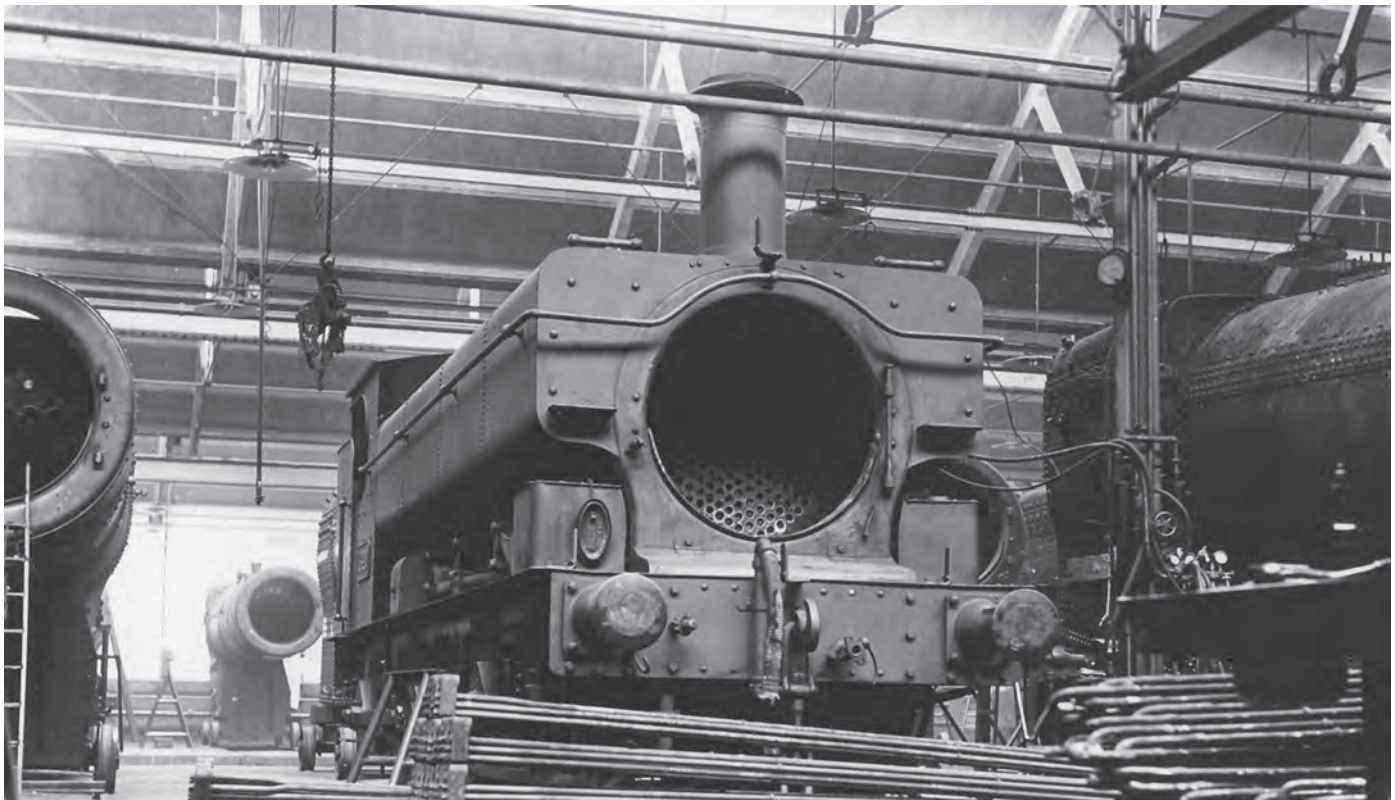

1620, built in 1880 and rebuilt with pannier tanks in 1917, undergoing heavy overhaul at Swindon Works in the early 1930s. It was withdrawn from Swindon shed in November 1937.
(GW Trust/P.J. Reed Collection)

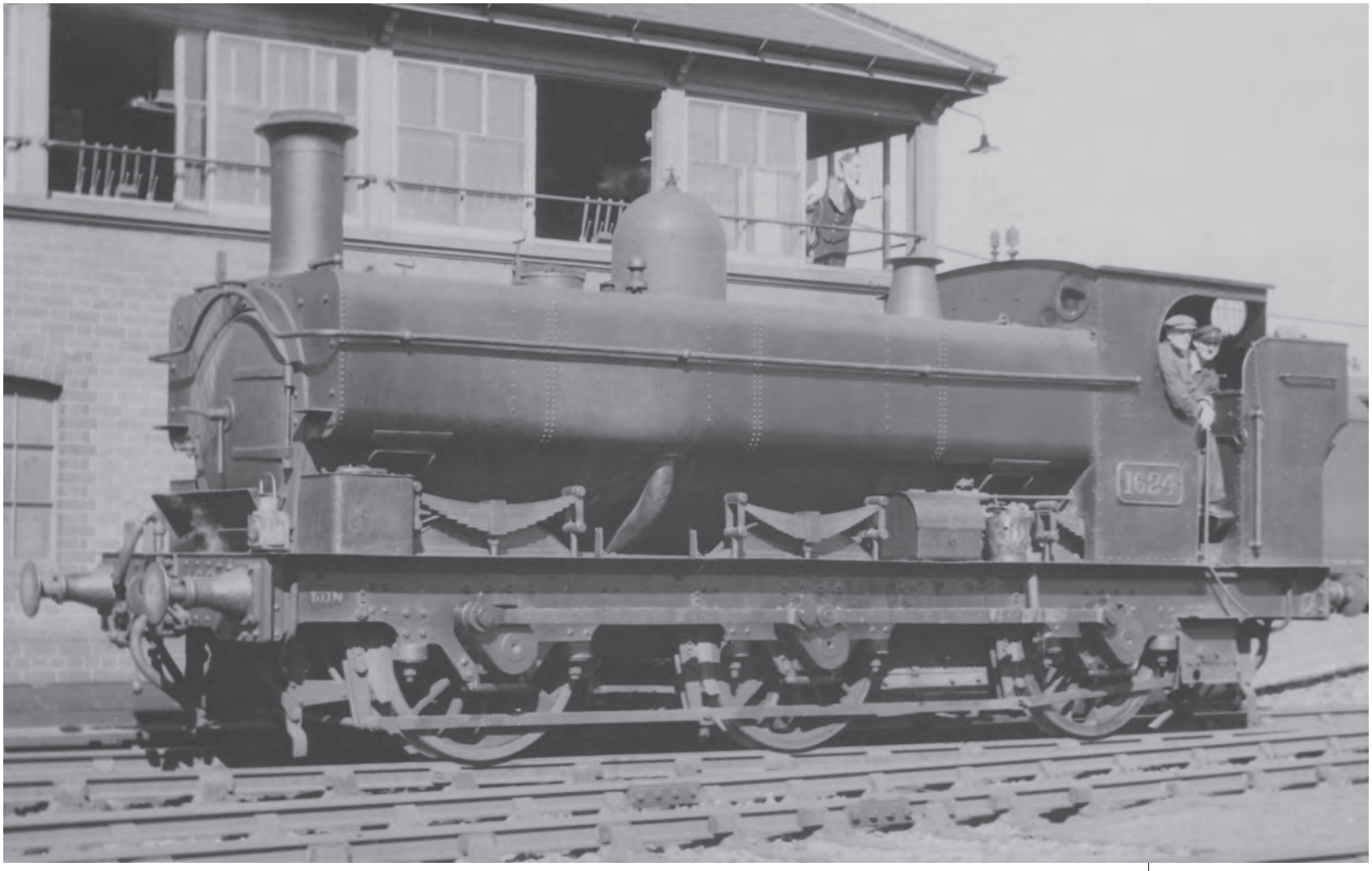

1624, one of the three last survivors of the 266-strong 'Buffalo' class, built in May 1880, rebuilt with pannier tanks with enclosed cab and enlarged bunker in April 1925. It was reprieved for the duration of the Second World War, and the photograph shows it at Yeovil Town, 29 September 1945. It was finally withdrawn in April 1946. (MLS)

'645' class, 1872-73 and '1501' class, 1878-81 (Nos. 645-654, 656, 757-766, 768-775, 902-904, 1501-1560, 1801-1812)

The '645' and '1501' classes were Wolverhampton built inside framed 0-6-0 saddle tanks, built in two batches in 1872-73 and 1878–81. Although originally classified as separate classes, after rebuilding with similar boilers and pannier tanks they were regarded as the same class. The first group, numbers 645-656 and 757-775, initially had short saddle tanks and frames extending just 5ft 3in from the trailing axle to the back, while the second series had full length saddle tanks and the frames extended 5ft 9in at the rear.

They also had other detailed differences in their dimensions. The '645' series had a total heating surface of 1,300sqft, tank capacity of 980 gallons and weighed 34 tons 14 cwt (considerably lighter than the double-framed saddle tanks) with a maximum axleload of just 12½ tons. The '1501' series had 1,145sqft heating surface but their larger saddle tanks held 1,120 gallons of water so they weighed a little heavier at 39 tons 8 cwt and had an axleload of 13 tons 5 cwt. Common to both classes was the boiler pressed at 140 lbs psi, wheel diameter of 4ft 6in, grate area of 16sqft, with a calculated tractive effort (at 85 percent) of 13,540 lbs. Until the mid-1890s,

Wolverhampton Works had its own livery, a lined 'bluebottle' blue, after which the GWR standard chrome green was applied.

Three of the Wolverhampton built engines of the first series were sold to the South Wales Mineral Railway direct from the Works without receiving GW numbers, and 767 followed in June 1875, the four returning to GWR control in 1908 and scrapped before being allotted GW numbers in January 1922. Two further locomotives of the class were sold direct from Works to the Carmarthen & Cardigan Railway and 655 was purchased from the GWR in May 1875. These three engines returned to the GWR in 1881 and were renumbered 902-904, acquiring brass dome covers and Dean chimneys. To add to the confusion, a subsequent (1892) class of GW saddle tanks commenced with No.655 filling in the numerical gap created and although most of the class were numbered in the 17XX series, they were known as the '655' class.

Most engines of the '645' class were subsequently fitted with cabs and many had back plates also. Most stayed within the Northern (Wolverhampton) jurisdiction, although 645/47/49/52/53 and 769/70 were Southern Division engines as were the three Carmarthen & Cardigan engines after their return. Many of the '645' series retained their short tanks although 650 acquired a full-length saddle tank in 1898. Like many other classes of GW saddle tanks, in the 1880/90s their wheel diameter was increased to 4ft 7½in and cylinder diameter was increased from 16in to 17in, in line with the '1501' class which were built with these dimensions. The '1501s' were built with open cabs and the final batch – 1801-12 – were built with brass dome covers. All the '1501' series were allocated to Northern Division sheds except 1552 which went to Tondu.

Reboilering of the '645' and '1501' class took place between 1886 and 1906. Six locomotives merely had their boilers reconditioned, five '645' class received reconditioned W3 (Wolverhampton) boilers from the '1501' series, three received S2 (Swindon) boilers, twenty got R2 and sixteen R3 (raised firebox) boilers, forty-eight had S4 (Swindon) back-dome flush

651 as built as a saddle tank in July 1872, at Dolgelley, c1900. It was rebuilt as a pannier tank in 1921 and withdrawn from Neath shed in 1932. (GW Trust/P.J. Reed Collection)

Saddle tank 766 built in 1873, with a string of Dean 4-wheel coaches at an unidentified location, c1910. It was rebuilt as a pannier tank in 1929 and withdrawn at Chester in 1935. (GW Trust/P.J. Reed Collection)

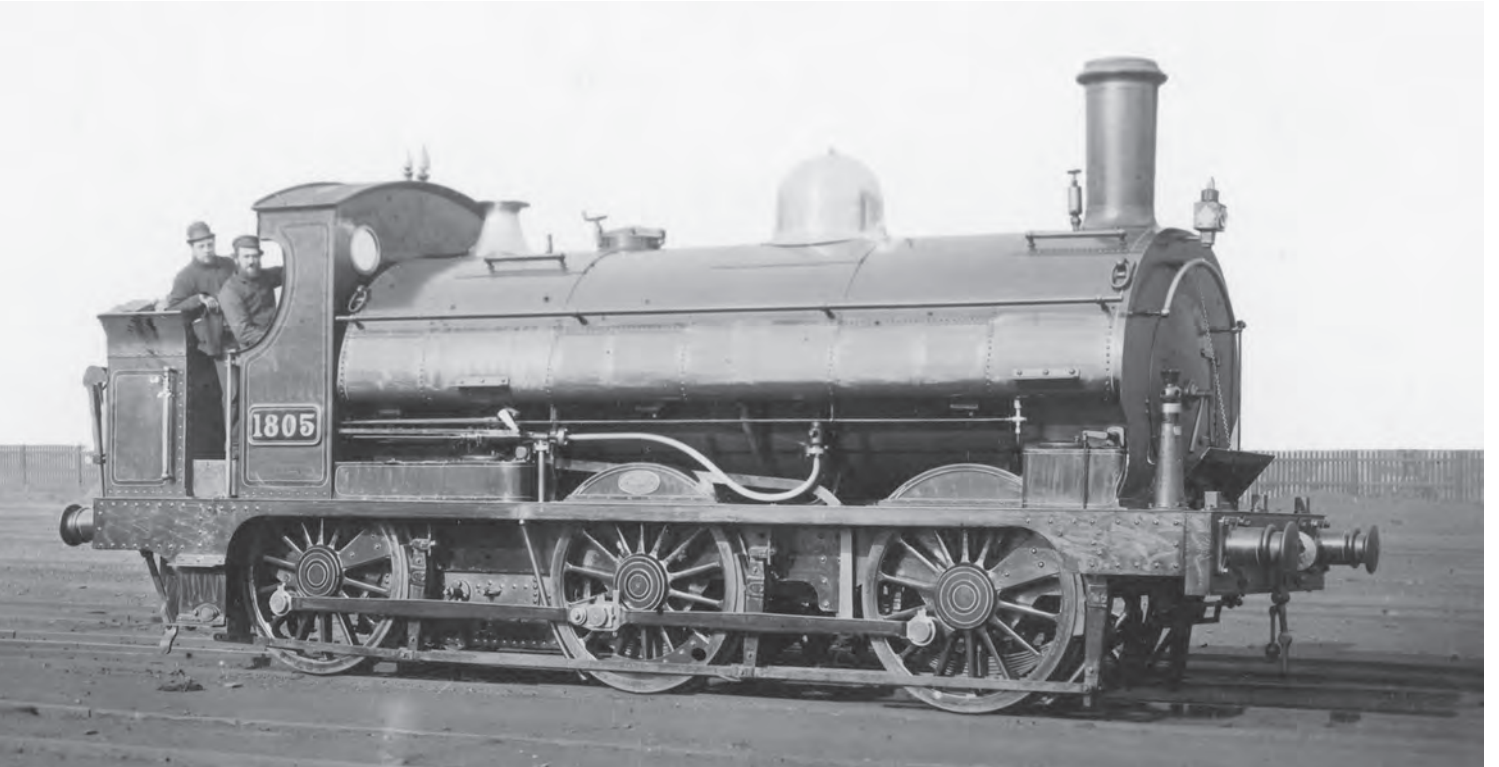

Saddle tank 1805 built in 1881 in an early lined Wolverhampton 'bluebottle' blue livery, c1895. It was rebuilt as a pannier tank in 1922 and withdrawn from Croes Newydd shed in 1930. (GW Trust/P.J. Reed Collection)

766 as a saddle tank hauling a freight near Handsworth Junction, c1920. (GW Trust/P.J. Reed Collection)

1515 of the '1501' class was one of the eight to retain saddle tanks to the end. It is found shunting here at a Cambrian or North Wales location c1920, clearly recently ex-works with polished brass dome on a mid-dome Swindon S4 boiler, open cab and original small bunker. (MLS)

boilers and six got the Belpaire B4 type. Eventually, all except 648, 763, 1515, 1544, 1556 and 1559 got the Swindon S4 boiler, identical to that developed by Dean for his '2301' Goods engine, which was still proving its worth seventy years later in Swindon tests compared with the Ivatt 2MT mogul boiler. Dimensions of the engines fitted with this boiler were: boiler pressure 150lbs psi, heating surface 1,306.41sqft, grate area 16.44sqft, tank capacity 1,000-1,120 gallons, weight 41 tons 10 cwt, axleload 13 tons 18 cwt, tractive effort (85 per cent) 15,935 lbs – all figures common with many of the other earlier GW saddle tanks in the 1880/90s rebuilt form. Full details of which locomotives received which type of boiler and when can be found in the RCTS history of Great Western locomotives (see bibliography).

The six engines with Belpaire boilers were 1501, 1516, 1517, 1521, 1523 and 1542. They received these Churchward modern boilers between 1904 and 1906. Initially they were 180 lbs psi pressure, though this was later reduced to 165 lbs. The grate area was 15.45sqft, and total heating surface 1,197.7sqft. With the larger 1,120 gallon tanks, they weighed 45 tons 16 cwt, axleload 15 tons 14 cwt, and had increased tractive effort of 17,525 lbs. In due time, boilers were exchanged and a number of others in the class received the B4 boiler.

The next major change was the replacement of the saddle by pannier tanks, commencing with 764 in July 1913 and finishing with 1519 in September 1930. Only eight of the 104 engines did not receive pannier tanks – 648, 652, 763, 772, 1515, 1544, 1556 and 1559. Eventually 94 engines received the B4 Belpaire boilers, 54 of them superheated, most fitted at the same time as the replacement of the saddle tanks. The pannier tanks had the capacity to hold 1,200 gallons. In their final form, the engines weighed 42 tons 17 cwt (the superheated engines were just over a ton heavier).

A number received enclosed cabs and many of those still extant in 1931 were fitted with the GW ATC equipment (see appendix). Just one, 1522, was fitted with auto-train working gear in 1931. Being Wolverhampton standard gauge engines, most were

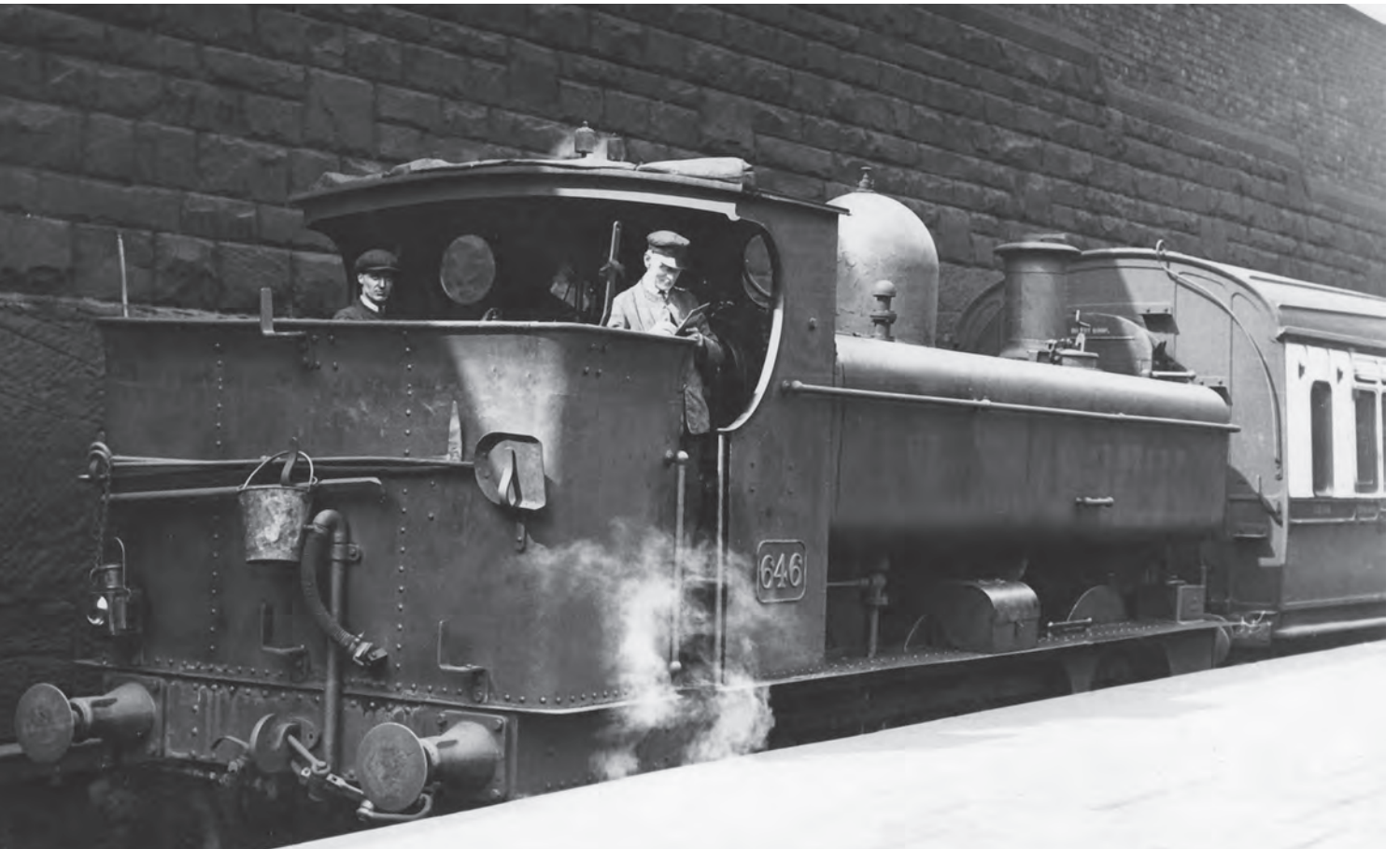

646, the second of the class of saddle tanks built in May 1972, rebuilt as a pannier tank in 1923, on a passenger train at Birkenhead Woodside, 2 June 1932. It retains the original small bunker and open cab. It was withdrawn from Birkenhead in 1934. (GW Trust/H.C. Casserley)

allocated to Northern Division sheds in the 1870s and 1880s, though a few were allocated to Southern depots and later spread further afield. By 1905, twenty-eight were based at Wolverhampton itself, fifteen at Stourbridge, eleven at Tyseley, eight each at Chester and Croes Newydd and seven at Birkenhead. Six were at Worcester and just four were in South Wales. Three further engines were transferred to the South Wales Mineral Railway in 1910 and 1911, by which time the GWR was operating that railway – No.1806 becoming SWM 3, 1811 SWM No.1 and 1546 SWM No.5.

A few engines went to Barry to assist with the docks shunting in 1922 and remained in South Wales. The Northern Districts still had the bulk of the class with twenty at Stafford Road, thirteen at Stourbridge, twelve at Tyseley, ten at Birkenhead and eight at Croes Newydd. After all were equipped with pannier tanks in the late 1920s and 1930s, they became more widespread with Croes Newydd then having the largest share with sixteen, Tyseley with ten, Stourbridge with seven and the Stafford Road allocation down to seven. The main increases (with three or four each) were at Fishguard Goodwick, Aberdare, Pontypool and Ebbw Junction. At various stages, odd examples were based at such far-flung sheds and sub-depots as Corwen, Garnant, Trawsfynydd, Bala, Llantrisant, Aberbeeg, Crewe(!), Milford Haven, Pantyffynnon, Ross-on-Wye, Weymouth, Yeovil and St Blazey.

Mileages in traffic ranged from 800,000 to over a million for most of the engines, with 770 achieving 1,118,826 and 1542 1,162,276 miles. Apart from the earliest South Wales Mineral engines scrapped before 1922, all lasted until the late 1920s (and the advent of the Collett 57XX) with many of the '1501' series lasting until the late 1930s, and several surviving the Second World War, with four making it into the nationalisation era (1531 at Oxford, 1532 at Bala, 1538 at Bristol SPM and 1542 at Swindon) although none received smokebox numberplates or the standard BR black livery and totem.

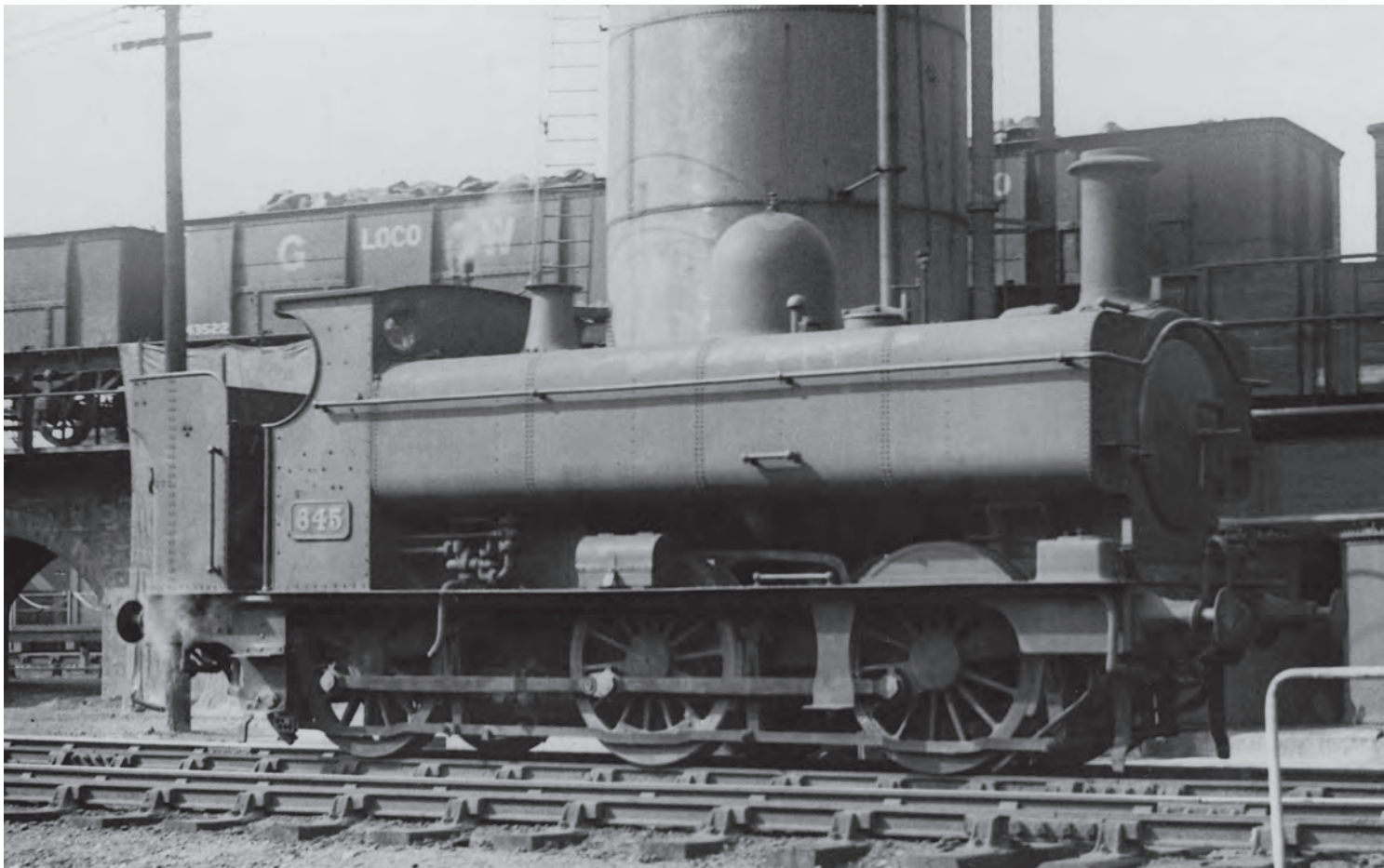

645, the first of the class, built in April 1872, nearing the end of its life in October 1932. It was rebuilt with pannier tanks in January 1914 and has an open cab and enlarged bunker and is at Wolverhampton Stafford Road, c1930. (MLS/Colling Turner)

769, built in April 1873 and rebuilt with pannier tanks in November 1922, at Merthyr on a passenger train, c1925. It was withdrawn in April 1930. (John Hodge Collection)

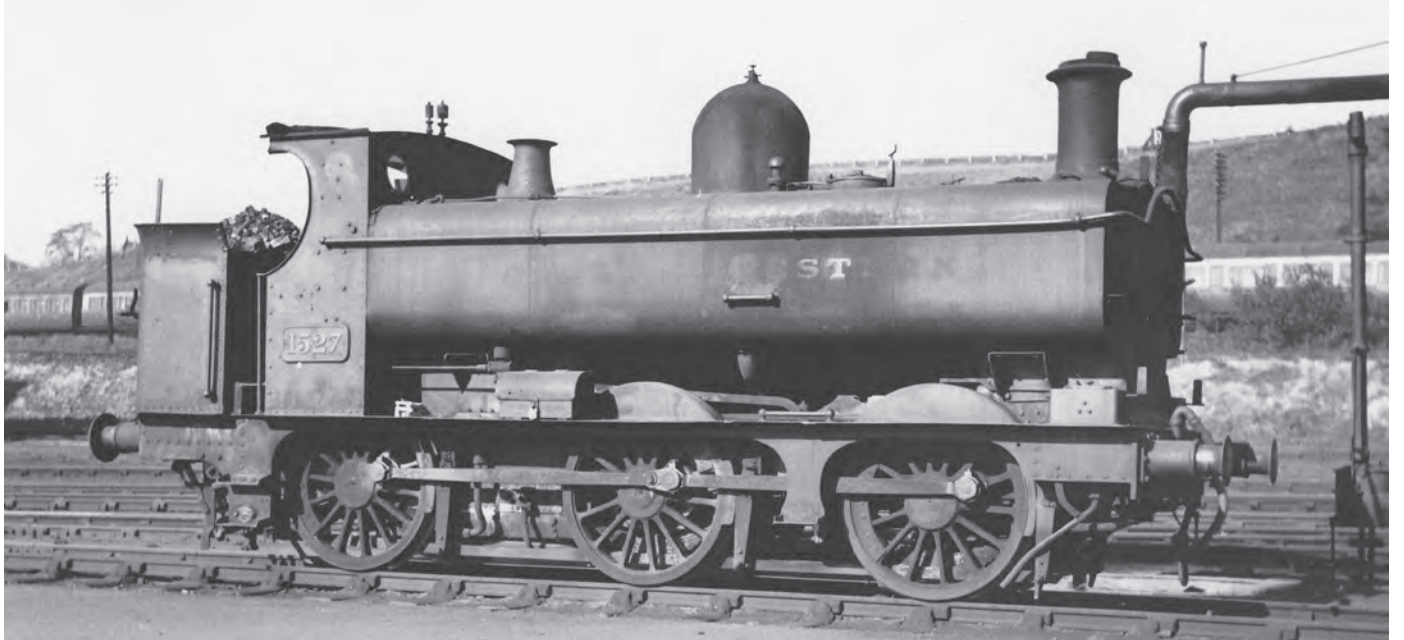

1527 built in June 1879 and rebuilt with pannier tanks in December 1921 at Stourbridge, 12 September 1935. It was withdrawn in July 1945. (F.K. Davies/John Hodge Collection)

1583 at the head of a passenger train at Merthyr, c1925. (John Hodge Collection)

1808, built in 1881 and rebuilt as a pannier tank in 1925, shunting at Chester, 18 May 1937. (F.K. Davies/John Hodge Collection)

1541, built in 1880 and converted to pannier tank form in 1920, seen here recently ex-works at an unidentified location, but possibly in the Wolverhampton area after overhaul before returning to Croes Newydd shed, c1923, and later transfer to Yeovil where it was withdrawn in 1937. (GW Trust/P.J. Reed Collection)

'850' class, 1874-95 (Nos. 850-873, 987-998, 1216-1227, 1901-2020)

Following on from their '645' class inside cylinder saddle tanks, Wolverhampton built an even smaller version that weighed only just over 30 tons and had an extremely light axleload of 10 tons 18 cwt. This standard gauge engine eventually multiplied to 158 engines and they were found undertaking useful work all over the system. They were built over a period of twenty years and despite their apparent lack of theoretical power, seemed to complete successfully tasks which would have seemed beyond their capability – such as the haulage of heavy empty stock trains between Old Oak Common and Paddington station.

Like so many of the other classes of saddle tanks built at this time, they came in several batches which were initially differently classified, but because of their similarity, especially after successive reboilerings and modifications, were alike enough to warrant one means of identification. The first batch, built between 1874 and 1876, was numbered 850-873 and 987-998, in typical GW numerical chaos – the GWR did not tidy up its numbering system until Churchward's 1912 renumbering and even then, he didn't bother to change the

numbers of the myriad 0-6-0STs. Some renumbering of absorbed engines took place in 1922 and it was really Collett's panniers that adopted a more rational numbering system.

This class, then, was known as the '850' class. They had full length saddle tanks and a dome on the firebox with safety valves mounted on the covers and had the 140 lb psi pressure boiler known as the R6. The cylinders were 15in x 24in, wheel diameter just 4ft, heating surface 914sqft and grate area 12.33sqft. Tank capacity was 644 gallons and tractive effort 13,387 lbs. Two earlier (1860 built) tank engines, Nos. 93 and 94, were converted in line with the '850' class in November 1875 and February 1877.

The '1216' series built between 1876 and 1877 were similar apart from an R3 boiler and were the last locomotives built during the superintendency of Joseph Armstrong. Dean perpetuated the class with the '1901' series built from 1881 right through to 1895, very similar to the previous examples, with R3 boilers, but cylinder size increased by an inch and wheel diameter by an inch also, with cabs and brass dome covers placed on the centre of the boiler. Tank capacity was modified to 600 gallons but the overall weight increased slightly to 32 tons 13 cwt with a maximum axleload of 11 tons 8 cwt. From No.1949, the engines' tank capacity was increased to 800 gallons, increasing the engine weight to 35 tons 2 cwt.

In 1894, Swindon produced a new design of boiler, the R4, with raised firebox and dome at the back. 118 boilers of this type were built up to 1908 and most of the class received this type of boiler between those dates. New tanks were built but ranged in capacity from 780 to 880 gallons. Dimensions of the engines rebuilt with R4 boilers, with the earlier '850' series brought into line, were: cylinders 16in x 24in, wheel diameter 4ft 1½in, heating surface 1,015sqft, grate area 11.16sqft, boiler pressure 150 lbs psi, tractive effort 15,825lbs. Weight remained about 35 tons.

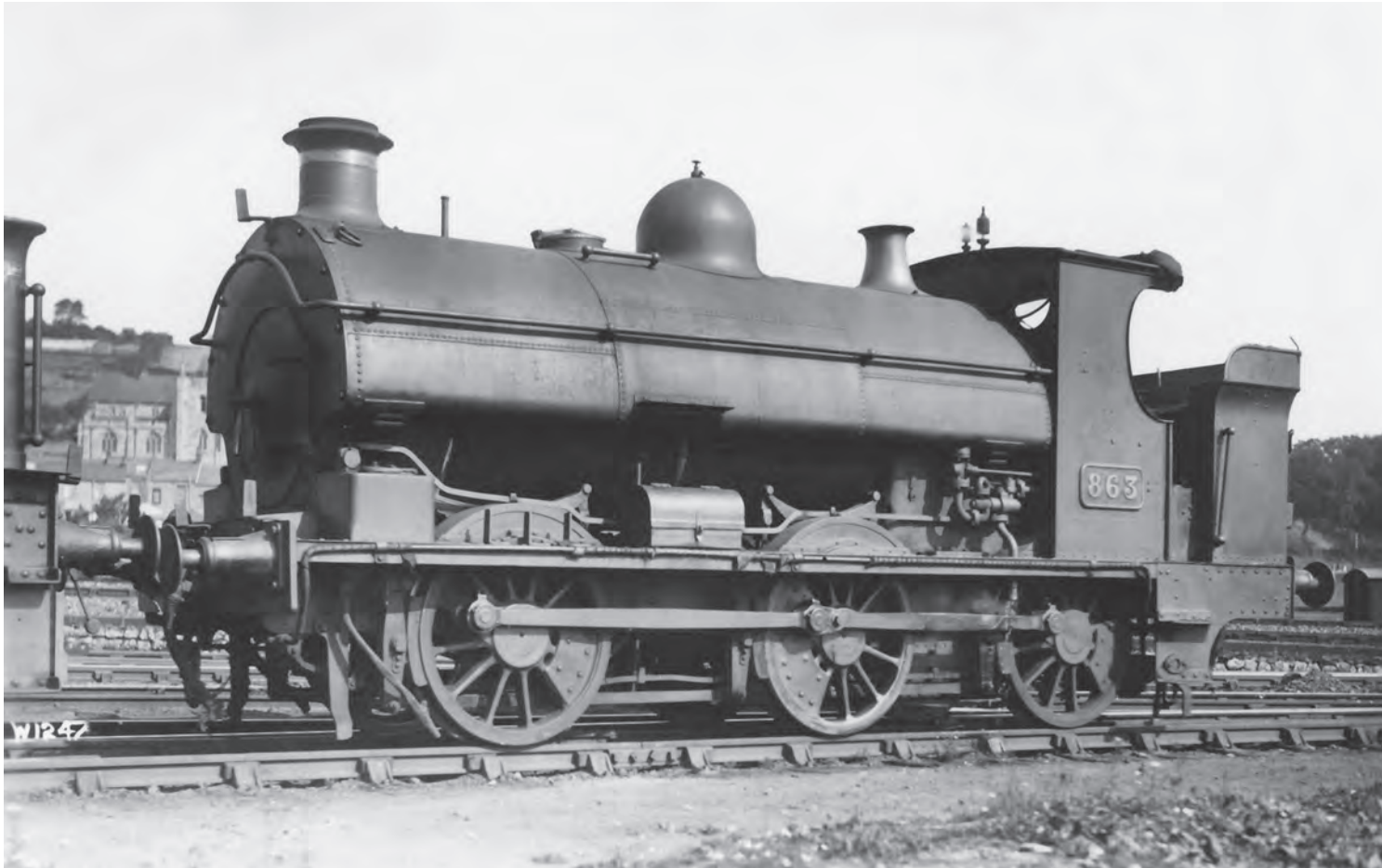

863 as built in November 1874, seen here at Laira shed still in saddle tank form with a small copper-capped chimney, 30 June 1926. It was rebuilt in 1927 and withdrawn from Taunton shed in 1932. (GW Trust/ P.J. Reed Collection)

854 built in June 1874 during ash disposal on Exeter St David's shed, 9 August 1922. It was rebuilt as a pannier tank in December 1926. (GW Trust/P.J. Reed Collection)

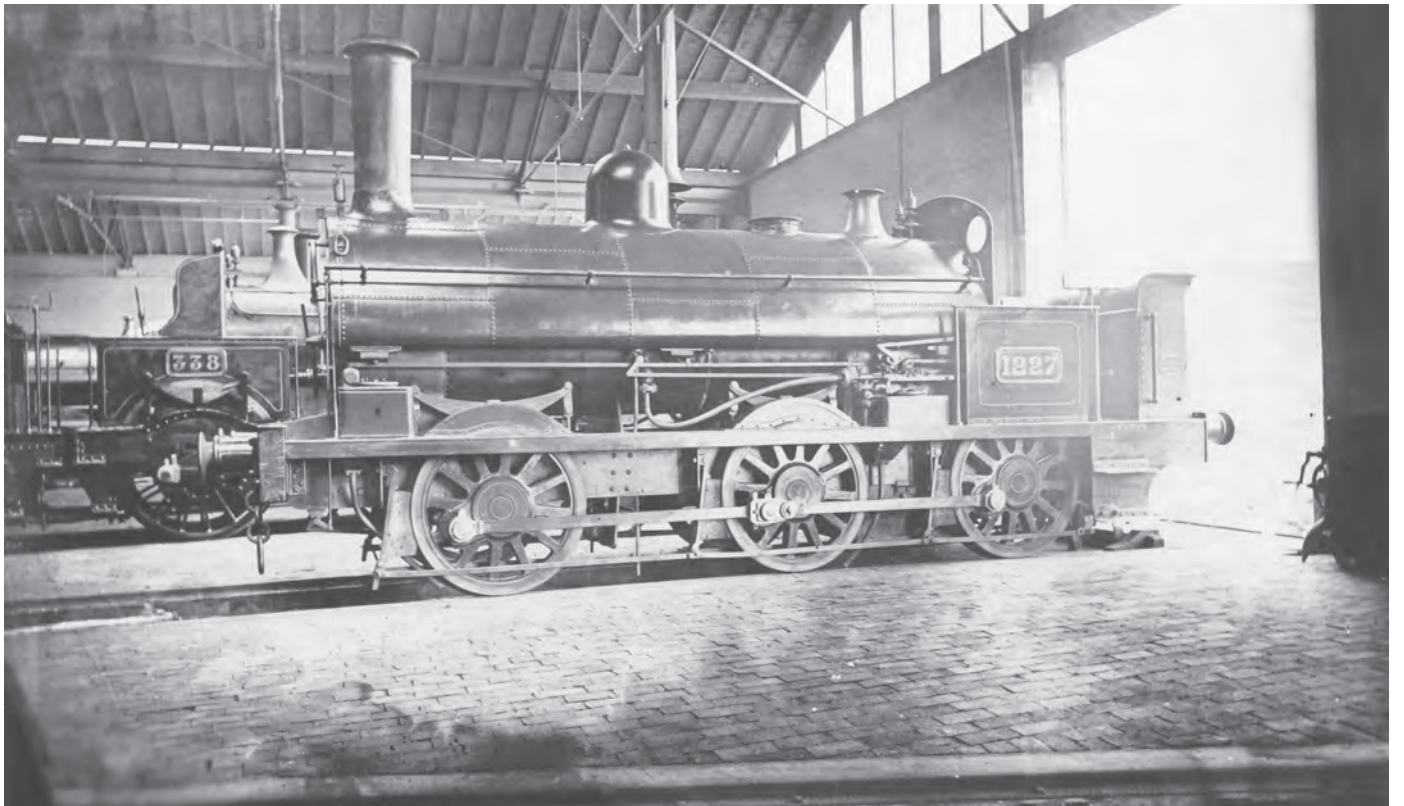

1227, built in 1877 in original condition in the Wolverhampton 'bluebottle' blue livery, with primitive cab, 1864-built Armstrong 0-6-0 338 behind, c1890. (GW Trust/P.J. Reed Collection)

2007, built in October 1892, which remained as a saddle tank until withdrawn in December 1949. It is photographed here at Didcot alongside Churchward 2-8-0 2817, 16 September 1938. (F.K. Davies/John Hodge Collection)

1944, built in 1887, which remained as a saddle tank throughout its life until withdrawn in 1934, piloting a Beyer Peacock double-framed 0-6-0 on a freight at Shrewsbury off the North & West and Cambrian lines, c1925. (GW Trust)

1941, built in 1886, with the branch passenger train by the East Looe River at Looe arriving from Liskeard, 10 July 1924. (GW Trust/P.J. Reed Collection)

An unidentified '850' class saddle tank leads a Lambourne Valley branch passenger train beside the River Lambourne, c1925. (GW Trust)

The prototype of the class, 850, after rebuilding as a pannier tank in 1913, based here at Newport Pill, c1930. (GW Trust/P.J. Reed Collection)

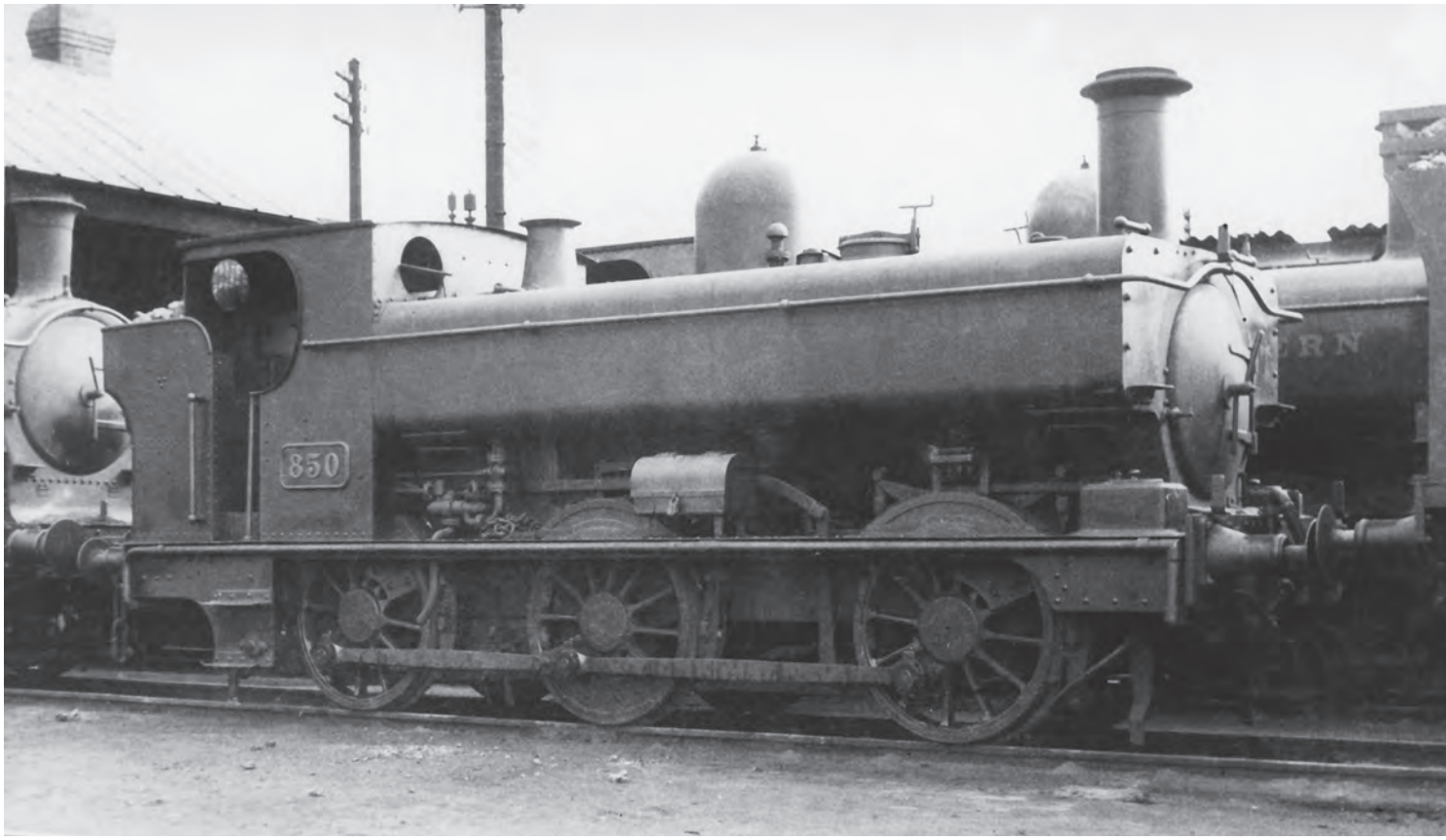

'850' class saddle tank 873, built in 1875, sold to the Blaenavon Iron Company in December 1912 and renumbered '10', at Blaenavon, 10 April 1936. (GW Trust/P.J. Reed Collection)

1905, built in 1881, after collision with the buffer stops in the platform at Bodmin Town station, c1910. It was rebuilt as a pannier tank in 1926 and withdrawn from Laira in 1936. (GW Trust/P.J. Reed Collection)

Over the years some dimensions changed, though not universally. Cylinders got rebored, increasing the diameter to 16½ inches, or even 17 inches on some engines and some frames were lengthened at the rear. Various types of chimney were utilised, of different height. Spark arrester attachments were added to the engines based at Didcot for the local Provender Stores and Ordnance depot shunting. The coal capacity was just two tons although some had slightly enlarged bunkers holding 2½ tons.

The '850' class were some of the first to be fitted with pannier tanks, 2012 and 2013 receiving them in 1910, together with Churchward's Belpaire boiler (the B4). Eventually 143 of the class received the B4, 43 the R4 and just one (1963) retained a reconditioned R3 boiler, being condemned in 1943 whilst still retaining its saddle tank also. The pannier tanks for this class held 800 gallons and the weight was slightly increased to 35 tons 13 cwt. Heating surface of the engine was 980.75sqft and the grate area was still 11.16sqft. Later the boiler pressure was increased to 165 lbs psi as on other panniers of similar date, raising the tractive effort to 17,410 lbs (or those with 16½in cylinders to 18,515 lbs), a remarkable power output for so small an engine. This compares with the LB&SCR 'Terrier' of almost similar size whose tractive effort was a mere 7,650 lbs.

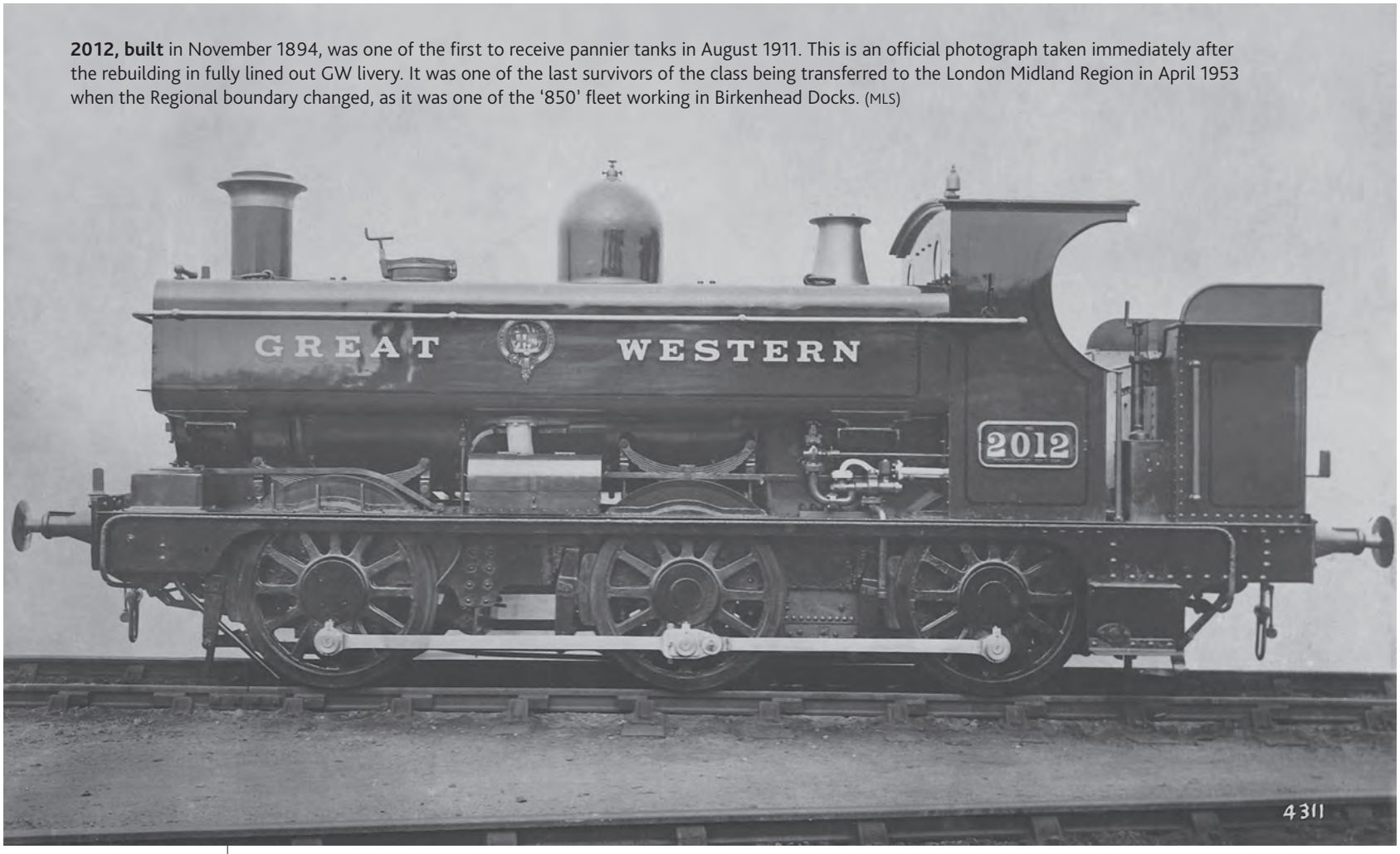

2012, built in November 1894, was one of the first to receive pannier tanks in August 1911. This is an official photograph taken immediately after the rebuilding in fully lined out GW livery. It was one of the last survivors of the class being transferred to the London Midland Region in April 1953 when the Regional boundary changed, as it was one of the '850' fleet working in Birkenhead Docks. (MLS)

Initially, most of the class, although built at Wolverhampton, were allocated to the Southern Motive Power Division. Just eight of the first thirty-six engines remained in the Northern Division. Nine of the dozen '1216' series also went south. With the 120 '1901' series added, they were found throughout the Great Western system, from the South Devon branches to Birkenhead Docks. Warning bells were provided to eleven of the class (862, 1917/35/49/50/51/68 and 2006/08/11/12) which at one time or another worked at this latter location. In 1905, just twenty were in South Wales, clustered at Swansea East Dock and Llanelli. Thirty-two were in the Wolverhampton District spread evenly between Stafford Road, Birkenhead, Tyseley, Stourbridge and Chester. There were twenty at Old Oak Common for empty stock working to and from Paddington, twenty-four were in the Bristol District, most at St Philip's Marsh and Swindon, twenty-seven in the Newton Abbot District with nine at Laira and eight at Newton Abbot depot and seventeen in the Worcester District with eight at Worcester and six at Gloucester. In 1922, the Old Oak ECS engines had risen to twenty-three, Bristol had sixteen, Birkenhead had eleven, Laira nine and Worcester eight. A new depot which had ten was Whitland, for use on the West Wales branches including to Cardigan and Fishguard Harbour.

Enclosed cabs were fitted to fifty-one of them from 1924 and their identity is recorded in

No.987, built in June 1875, and rebuilt with pannier tanks in March 1924, c1925. It was withdrawn in April 1925. (MLS)

the appendix. Because of their light axleload and short wheelbase, they were acceptable all over the system and particularly useful in docks sidings at Bristol, Plymouth, Llanelli and Birkenhead as well as other industrial sidings with sharp curvature. Four (1909/15/18/19) worked on the Cornwall Minerals Railway and until 1927 '850s' remained the regular engines for the Old Oak Common/Paddington ECS working. There were pockets of the engines at Burry Port (nine), Sandy on the Burry Port & Gwendraeth Valley line (seven) Whitland (thirteen), Worcester (nine), Laira (six), and St Blazey for the china clay (four). A few found their way to the Cardiff Valleys and Central Wales. Their last allocations were at Llanelli and Birkenhead Docks.

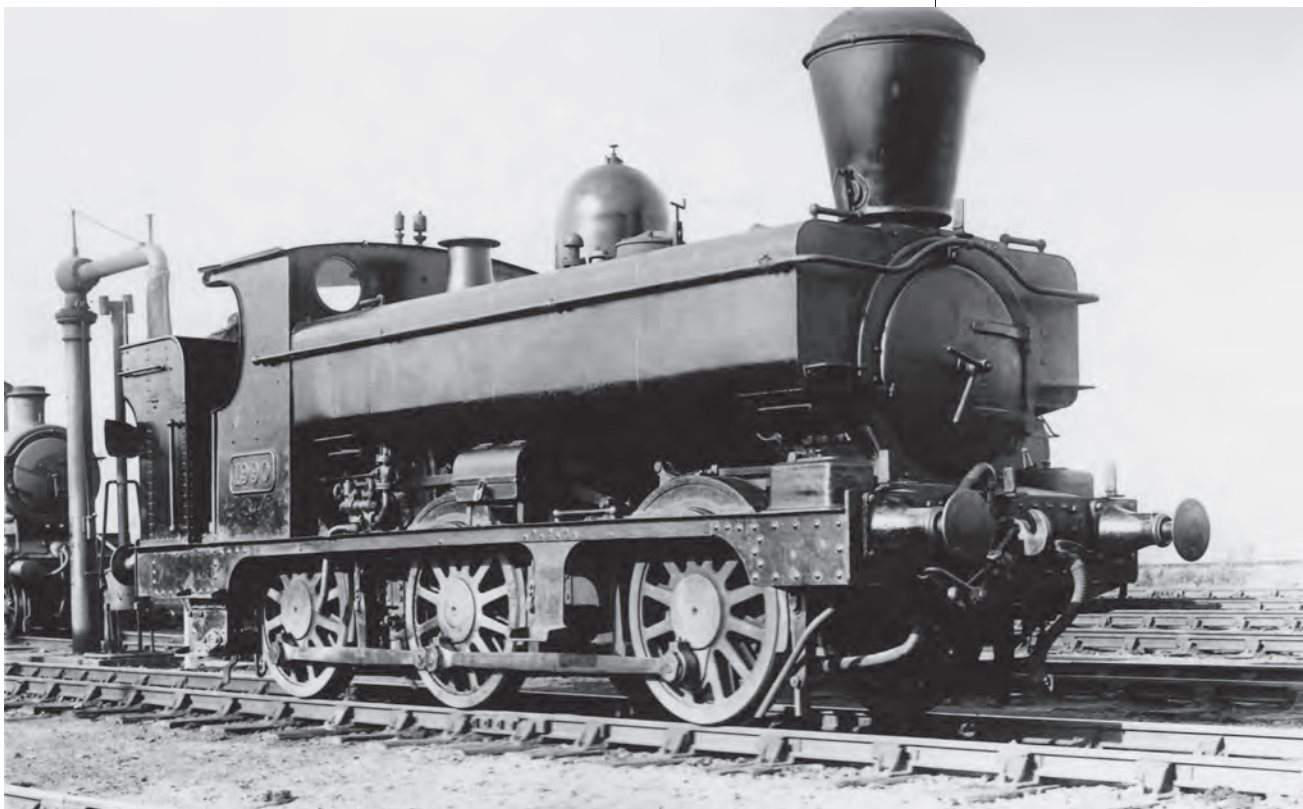

1990, built in June 1891, was one of the class equipped with a spark arresting chimney for operation at the Didcot Provender and Royal Ordnance depots. It was modified with pannier tanks and enlarged bunker in July 1930 and was withdrawn in November 1949. It was photographed c1935. (MLS/P. Hutchinson)

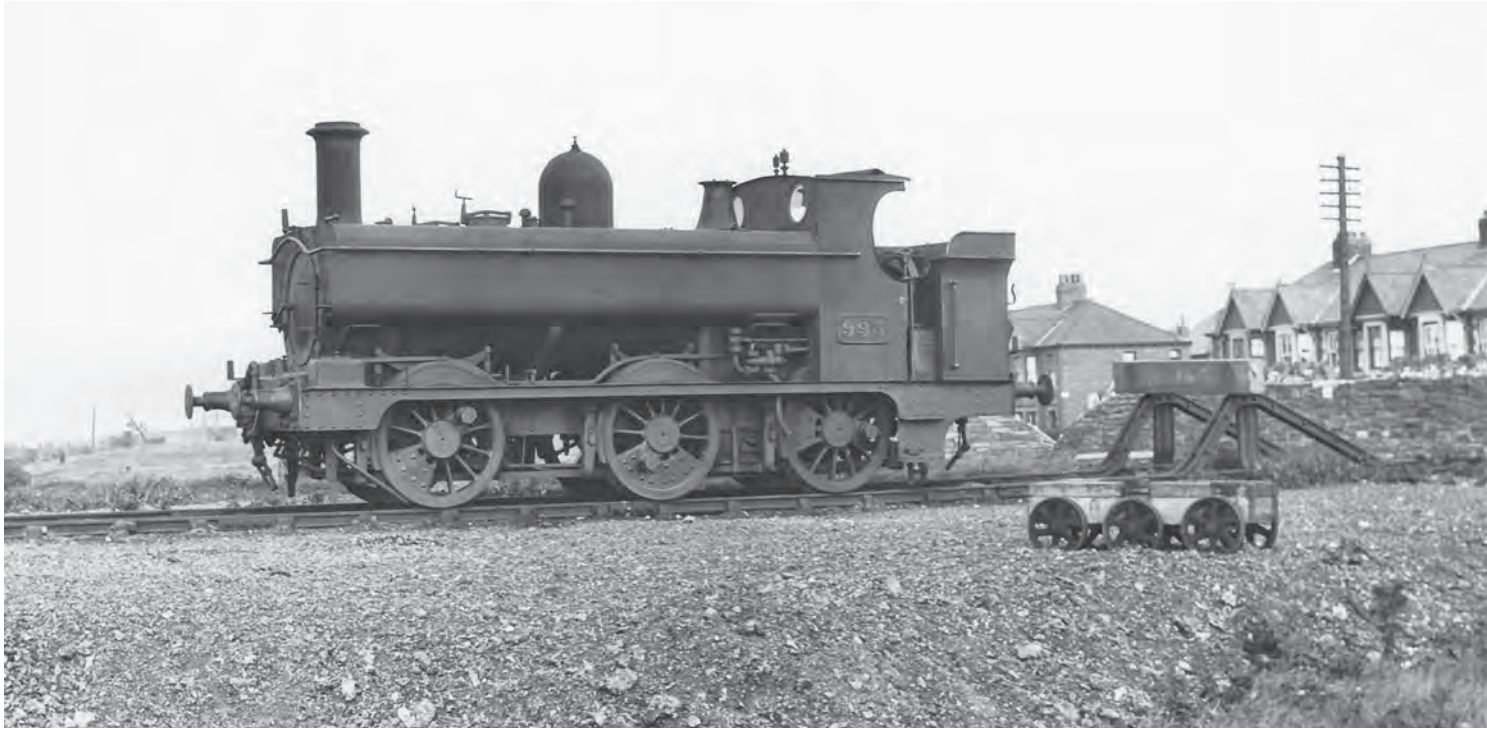

Although many of the class survived to be taken into British Rail's ownership, some succumbed to redundancy and were condemned when the GW began building the 57XX Collett pannier tanks in 1929. 993, built in October 1875, which had received its pannier tanks in December 1923, was withdrawn in September 1930 and is seen here at Newport, high and dry in a remote siding, awaiting scrapping. (MLS/J.A. Coltas)

1912, built in 1882 and converted to pannier tank form in 1927, with other pannier tanks including a 97XX condensing pannier at Old Oak Common, 5 June 1948, just before its withdrawal in 1949. (GW Trust/P.J. Reed Collection)

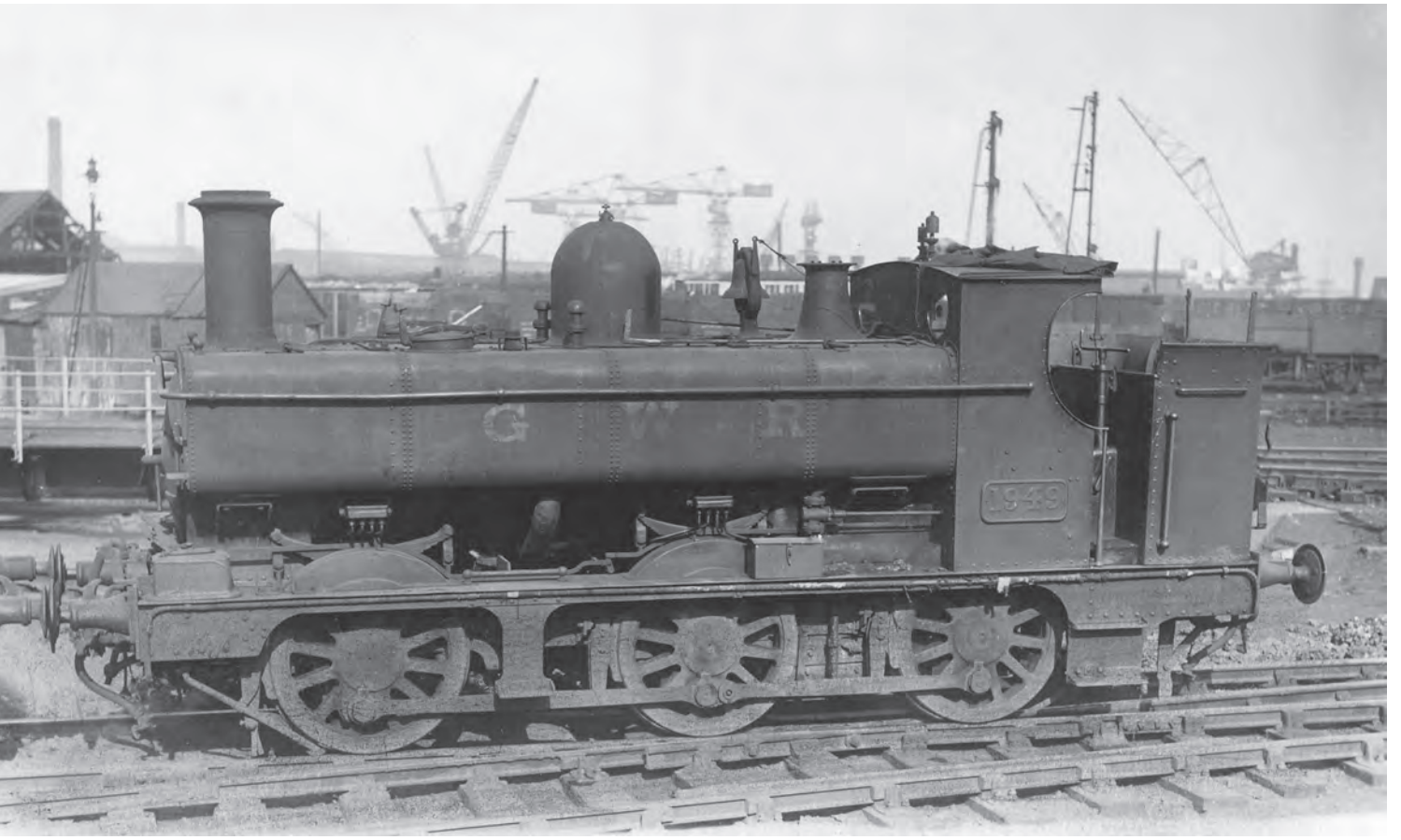

1949, built in 1888 and rebuilt as a pannier tank in 1923, shunting on Birkenhead Docks shortly before withdrawal in April 1950. (GW Trust/ P.J. Reed Collection)

1985, built in 1891 and rebuilt as a pannier tank in 1925, on a freight at Fowey, c1946. It was withdrawn from Laira in 1949. (GW Trust/P.J. Reed Collection)

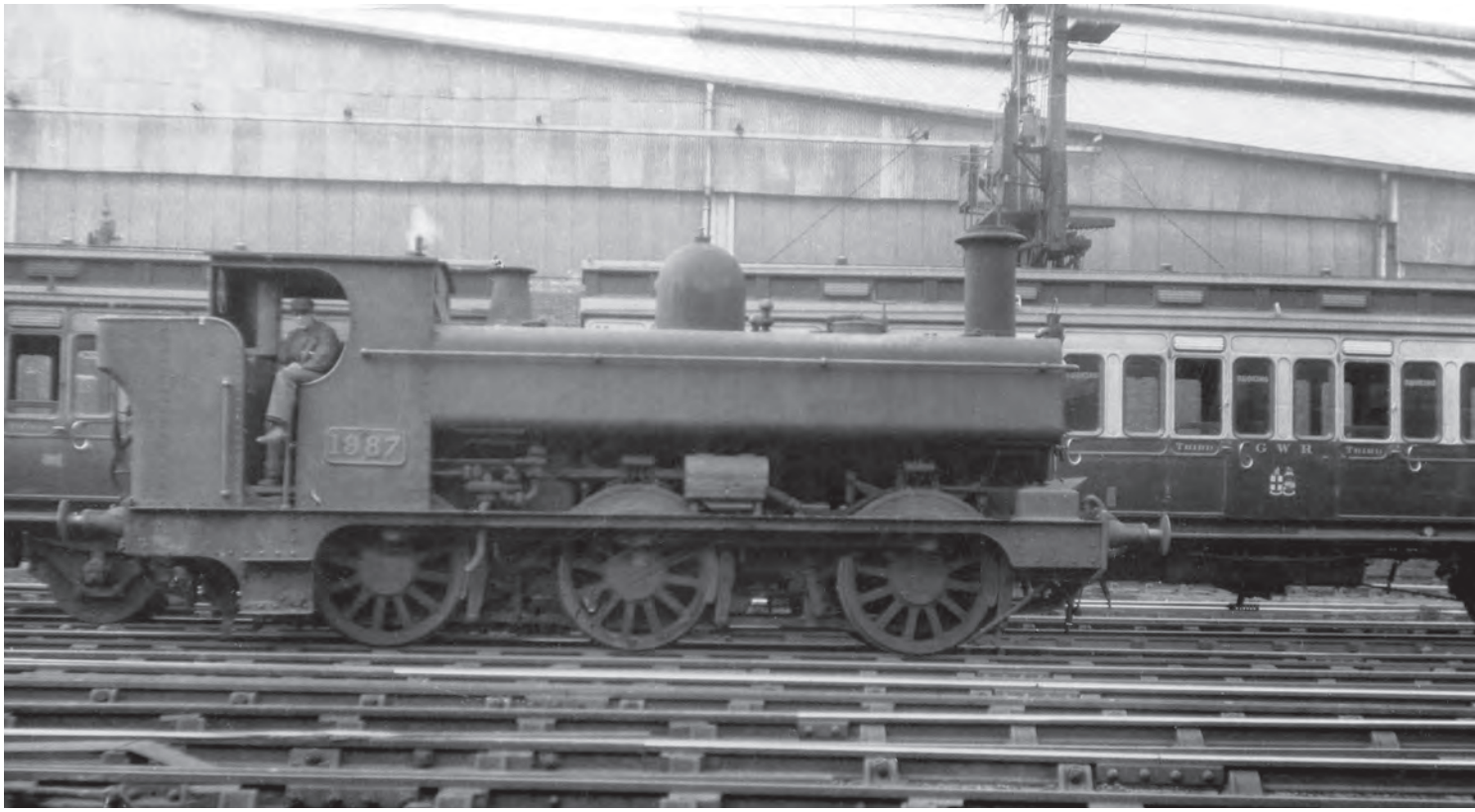

1987, built in 1891 and rebuilt as a pannier tank in 1915, performing ECS duties at Paddington station, c1928. It was withdrawn in January 1929. (GW Trust/P.J. Reed Collection)

2009, built in 1894, and rebuilt with pannier tanks in 1925, shunting at Gloucester, 26 April 1947. (GW Trust/W. Potter)

Members the class were fitted with warning bells while allocated for shunting at Birkenhead Docks. 1968 was built in February 1890, converted to a pannier tank in June 1925 and was withdrawn in September 1951. It is at Birkenhead, c1950. (MLS/P. Hutchinson)

Forty-three became part of BR (Western Region) at nationalisation and received the 2F power classification and ten (1967/89/91 /96/2008/10/11/12/14/16) were painted unlined black with the BR smokebox numberplate. Mileages for these engines ranged from 550,000 to 1,250,000, exceptional for such a small engine, the highest being 1903, condemned in June 1952, with 1,288,742. When Regional boundary changes took place, the Birkenhead engines – 1935, 2008, 2011 and 2012 at that time – were transferred to the London Midland Region with 2008 and 2012 being the last survivors of the class.

Some eight of these locomotives were sold by the company, five to colliery owners. 855 was the first to be sold, in 1906, to North's Navigation Colliery at Maesteg. Three, 864, 873 and 993, were sold to the Bute Works Supply Company in 1912/3 and two of these, 864 and 873, were sold on a year later to the Blaenavon Iron Company. 993 became No.33 of the Alexandra Docks & Railway Company, being reabsorbed by the GWR in 1922. The other four, 1923, 1956, 1966 and 2020 (all pannier tanks by then) were sold to collieries in 1939 in Blaengarw, Darlington, Risca and Ammanford respectively, becoming NCB property on nationalisation of the coal industry in 1947. 855 is believed to have been scrapped

2011, built in November 1894 and equipped with pannier tanks and enlarged bunker in August 1922, at Morpeth Dock, Birkenhead, 28 April 1956. It was withdrawn a few months later in August. The warning bell, BR smokebox door numberplate and '6C' shedplate are very prominent in this photograph. (MLS)

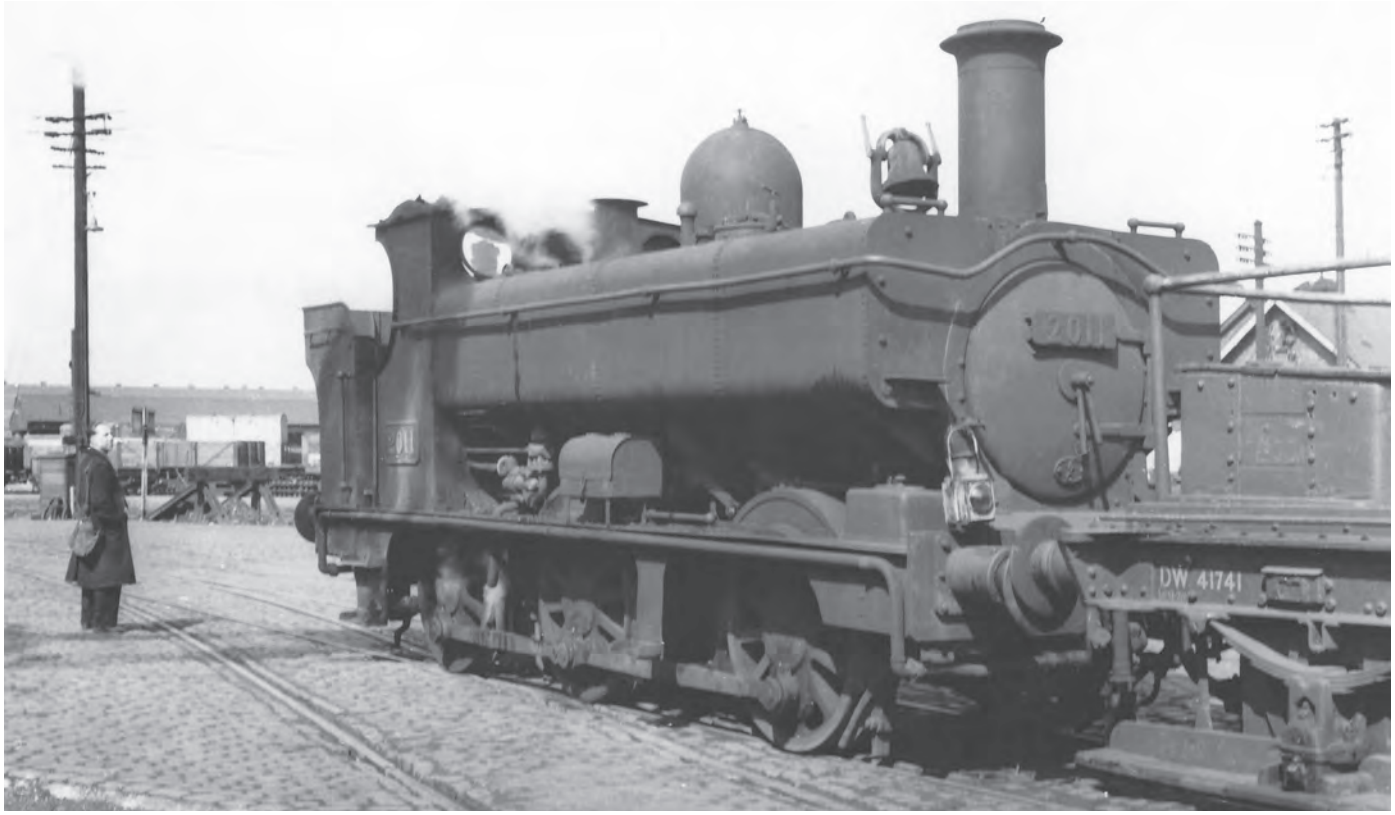

Llanelli's 2012, a late survivor, built in November 1894 and rebuilt with pannier tanks, larger bunker and enclosed cab in August 1910, seen here at Llanelli in 1953 before transfer to the LMR for use at Birkenhead Docks. (John Hodge/Kidderminster Railway Museum)

The last survivor, 2008, at Swindon after withdrawal in March 1958. Note the BR 'lion & wheel' totem visible on the tank side under the grime. (R.C. Riley)

in 1933, 864 seems to have been scrapped within a couple of years of being sold, but 873 lasted at the iron works until 1942. 993 was scrapped as a GW engine in 1930 and the withdrawal dates of the four NCB engines is unknown, other than 1956, which was moved by the NCB to the Sutton Manor Colliery in St Helens, where it was named *Monty* and was not withdrawn until 1950.

'119' class, 1878-83 (Nos. 119-121, 123-130)

GW numbers 119-130 were originally 0-6-0 tender engines built to the design of Daniel Gooch in 1861-2. All bar No.122 were rebuilt as 0-6-0 saddle tanks between 1878 and 1883. They had sandwich frames outside and plate frames inside, a very strong combination, and the original Gooch valve gear was replaced by Stephenson's patent. They had Wolverhampton 'middle dome' boilers with full length saddle tanks covering both smoke- and firebox. At first four of them – 119-121 and 123 – were fitted with condensing gear. All had 17in x 24in cylinders, 4ft 6in diameter wheels, boiler pressure of 140 lbs psi, 1,154.44sqft of heating surface and weighed 44 tons 13 cwt,

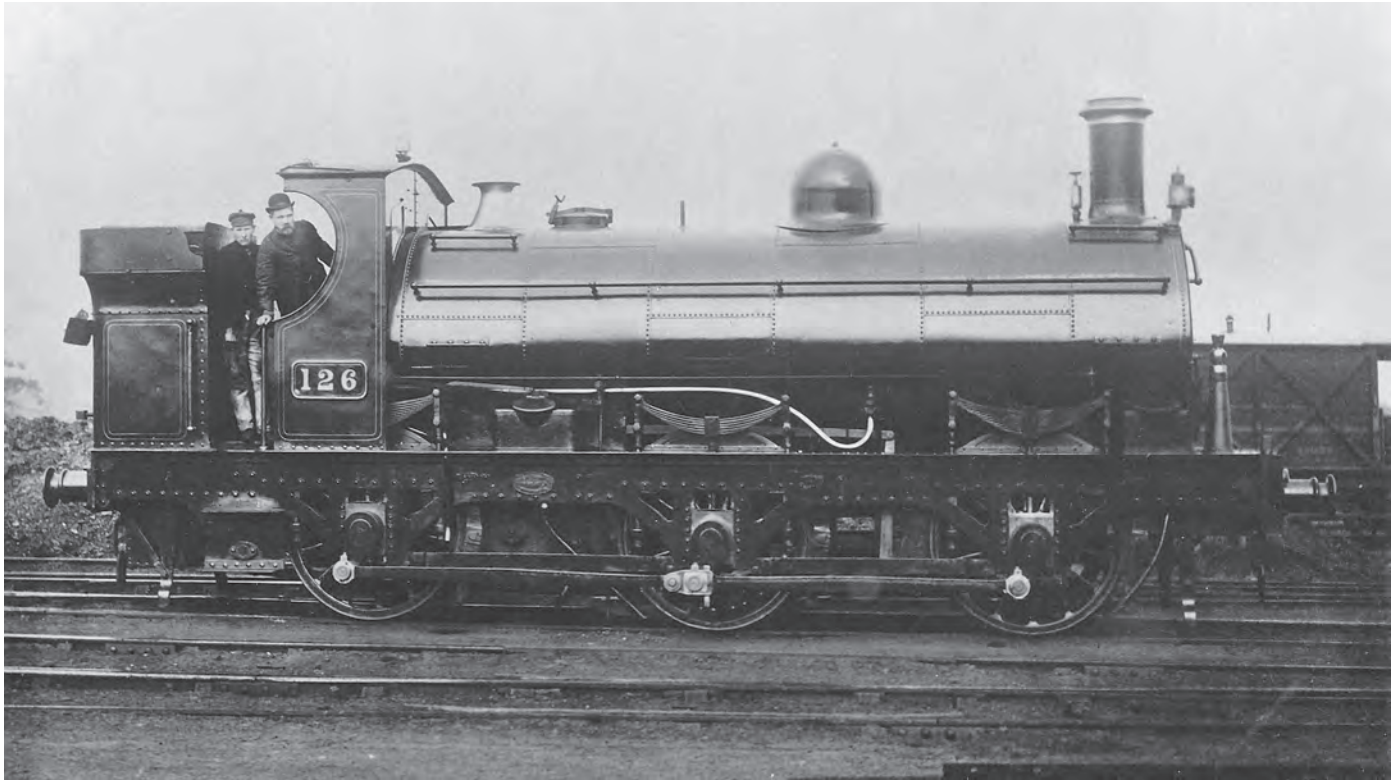

No.126, rebuilt from 0-6-0 tender engine in March 1881 as a saddle tank, shortly after overhaul in the Wolverhampton blue livery, posing with its crew, c1895. It was rebuilt with pannier tanks in 1920 and was withdrawn in July 1928. (MLS/Bob Miller Collection)

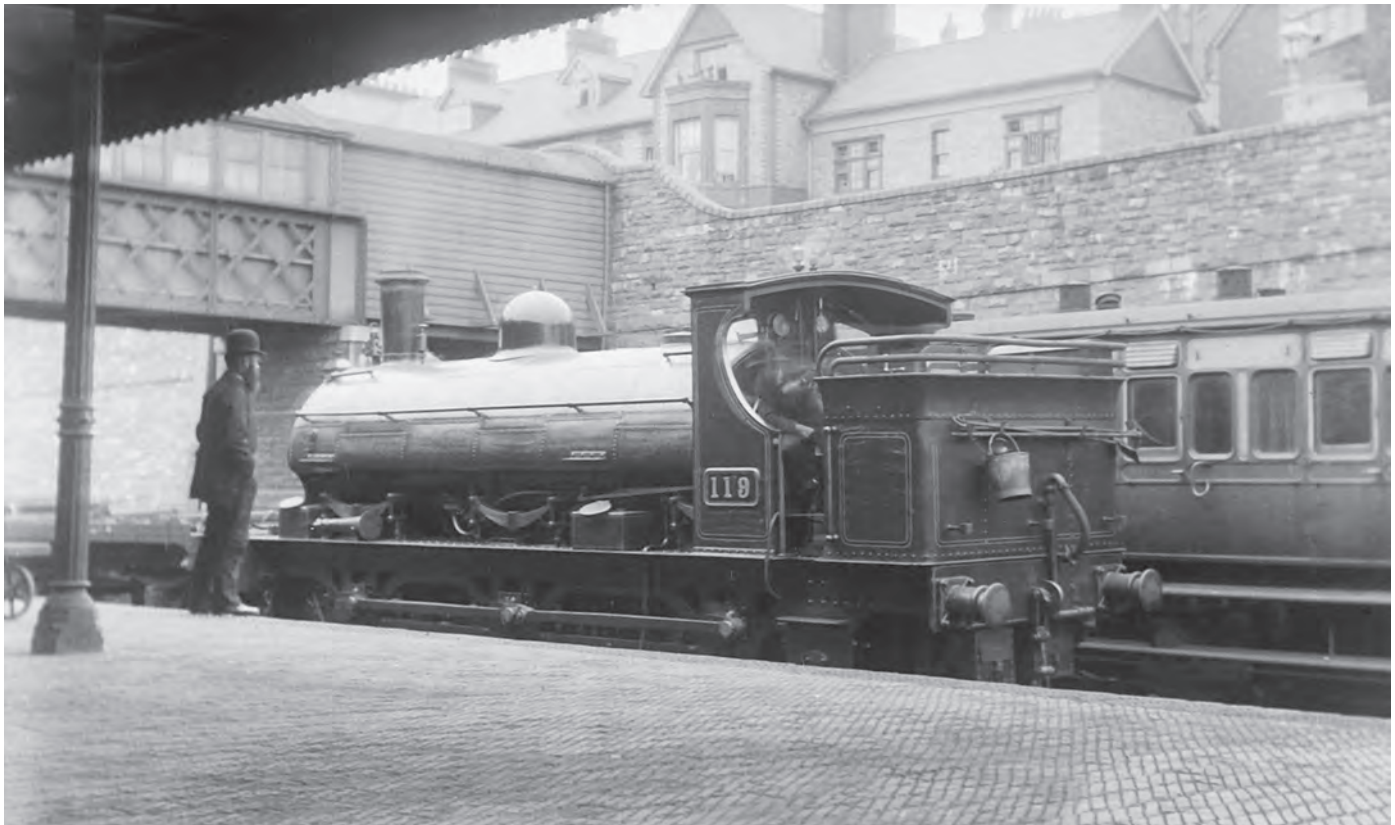

No.119, rebuilt from an 0-6-0 tender engine in December 1878 as a saddle tank, also in lined blue livery, at Newport High Street station, 24 August 1891. It remained in this form and was an early withdrawal in April 1919. (GW Trust/P.J. Reed Collection)

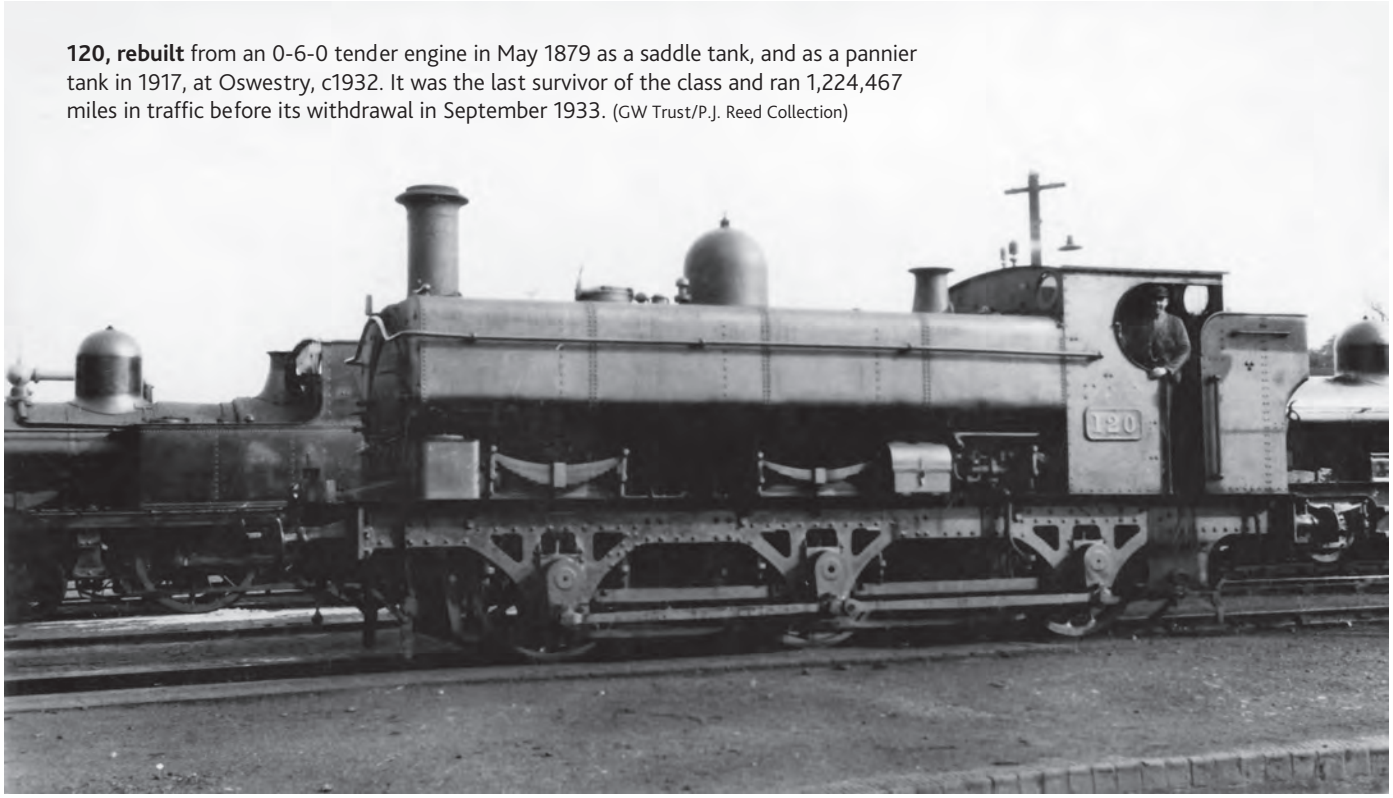

120, rebuilt from an 0-6-0 tender engine in May 1879 as a saddle tank, and as a pannier tank in 1917, at Oswestry, c1932. It was the last survivor of the class and ran 1,224,467 miles in traffic before its withdrawal in September 1933. (GW Trust/P.J. Reed Collection)

with maximum axleload of 15 tons 13 cwt. The tank held 1,000 gallons of water.

Although built for the Northern Division, all were sent to work in South Wales from 1895. They were then overhauled at Swindon and brought into line with the Swindon built 0-6-0STs – with 4ft 7½in diameter wheels, S4 boilers (150 lbs psi), heating surface of 1,366.1sqft and grate are of 17.33sqft. The total weight increased to 46 tons 16 cwt but the axleload remained the same as the weight was evenly balanced over all three axles. The tank capacity was increased to 1,080 gallons and because of the boiler pressure increase, tractive effort (at 85 per cent) was 15,935 lbs.

129 and 130 were fitted with pannier tanks in 1913 and the

No.124 in final pannier tank form (rebuilt in 1917), but with open cab and small bunker, at Old Oak Common where it had been allocated since 1921. This photo was recorded as taken on 21 May 1931, which is odd as the engine was apparently withdrawn in May 1927. The photographer was H.C. Casserley who meticulously recorded details of all the photos he'd taken, but this must be an error and be between 1921 and 1927, most likely 21 May 1921. (MLS/Bob Miller Collection/ H.C. Casserley)

remainder were subsequently similarly treated except for 119 and 127 which were withdrawn in 1919 and 1910 respectively in saddle tank form. 120, 121, 123-126, 129 and 130 received back dome Belpaire boilers, with increased pressure of 165 lbs but reduced overall heating surface of 1,157.38sqft. Weight was marginally less at 45 tons 4 cwt, but the axleload increased to nearly 16 tons on the leading axle. Tractive effort was then 17,525 lbs. The pannier tanks had the standard 1,000 gallon capacity and 120, 121 and 126 got enclosed cabs and enlarged bunkers in 1925.

Most were initially allocated to Pontypool Road or other sheds in South Wales, although by 1922 they had all been reallocated to Bridgend (three), Rhymney (two), Merthyr (two) and singly to Cardiff East Dock, Newport and Tondu. Two spent time at Old Oak Common – 128 between 1906 and 1918, replaced by 124 in 1921. As late as 1930, No.120, the last survivor, was transferred to Oswestry from where it was withdrawn in 1933. Like many of the pre-grouping GW 0-6-0Ts, nearly all exceeded a million miles in traffic (excluding the two withdrawn as saddle tanks and 129 and 130 which were both withdrawn in 1919).

'322' class, 1878-85 (Nos. 322-327)

Six 'Beyer' 0-6-0 tender engines (322, 324, 326, 336, 337 and 359) from a batch ordered by Joseph Armstrong in 1866, were rebuilt as saddle tanks at Wolverhampton Works between December 1878 and September 1885. They were rebuilt in similar fashion to the '119' class, also converted from 0-6-0 tender engines, with mid-dome boilers and full-length saddle tanks. These engines also had Wolverhampton designed condensing gear initially. They had varying cylinders sizes retaining the differences of the tender engines – 326 having 17in x 24in, 324, 325and 327 17in x 26in, and 322and 323 17½in x 26in. They had 140 lb psi boilers, 1,282sqft of heating surface and grate area of 15.5sqft. The biggest difference from previous saddle tanks was the diameter of their wheels – 5ft 2in. Weighing 45 tons 2 cwt, they had a heavier 16 ton 2 cwt axleload over the first pair of axles, tanks with 1,100 gallon capacity, and tractive effort of 14,422 lbs.

322, 323 and 327 received secondhand boilers in 1902 (R2 or S4), 324 received a mid-domed boiler with raised firebox in 1898,

No.322 as a saddle tank still with a mid-dome boiler, c1912. It was rebuilt from an 0-6-0 in July 1880 and subsequently received pannier tanks in 1925. (MLS/Bob Miller Collection)

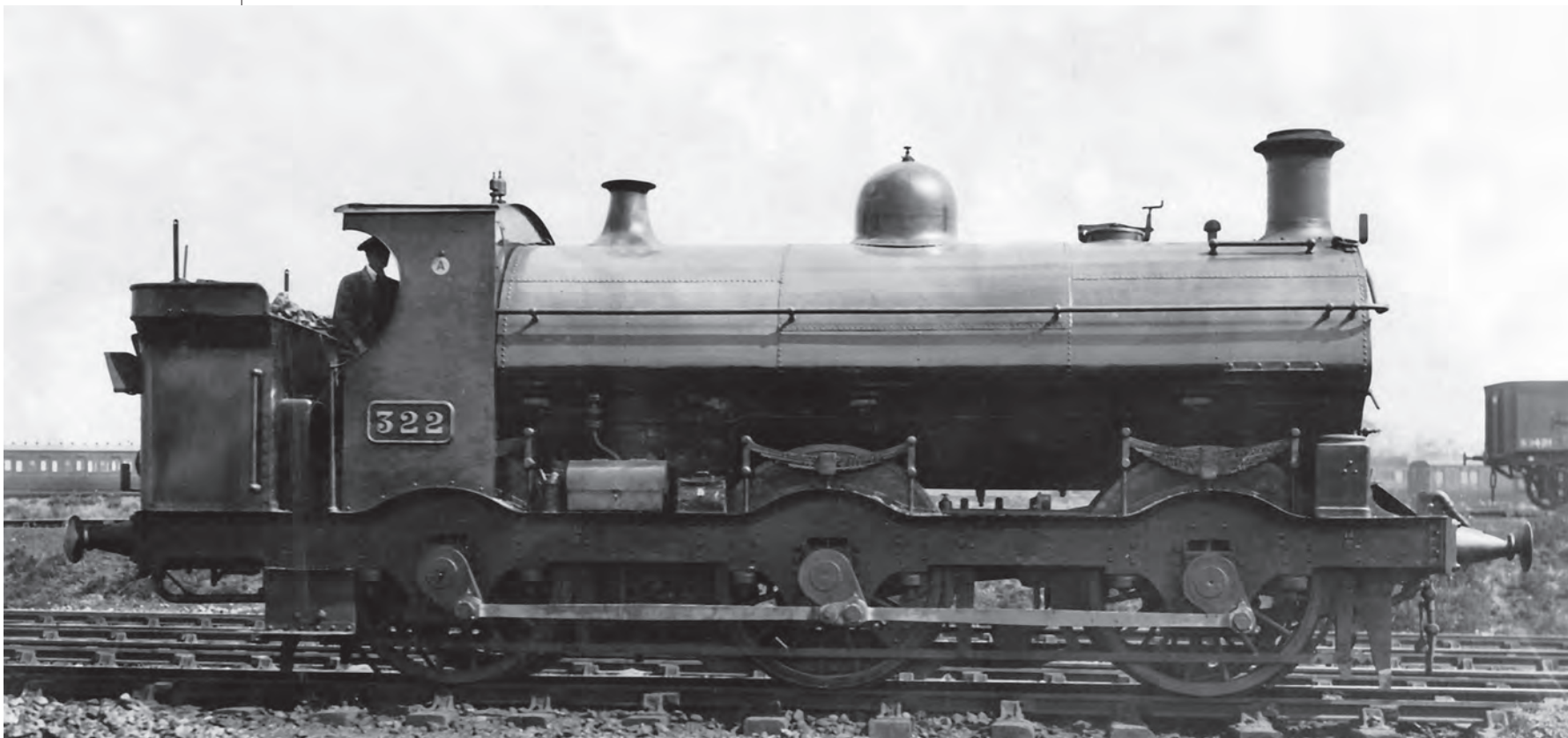

No.323 rebuilt from 0-6-0 tender engine in December 1879, with open cab and original small bunker, but well-worn and nearing withdrawal in July 1932 as the last survivor of the small class. (MLS/Bob Miller Collection)

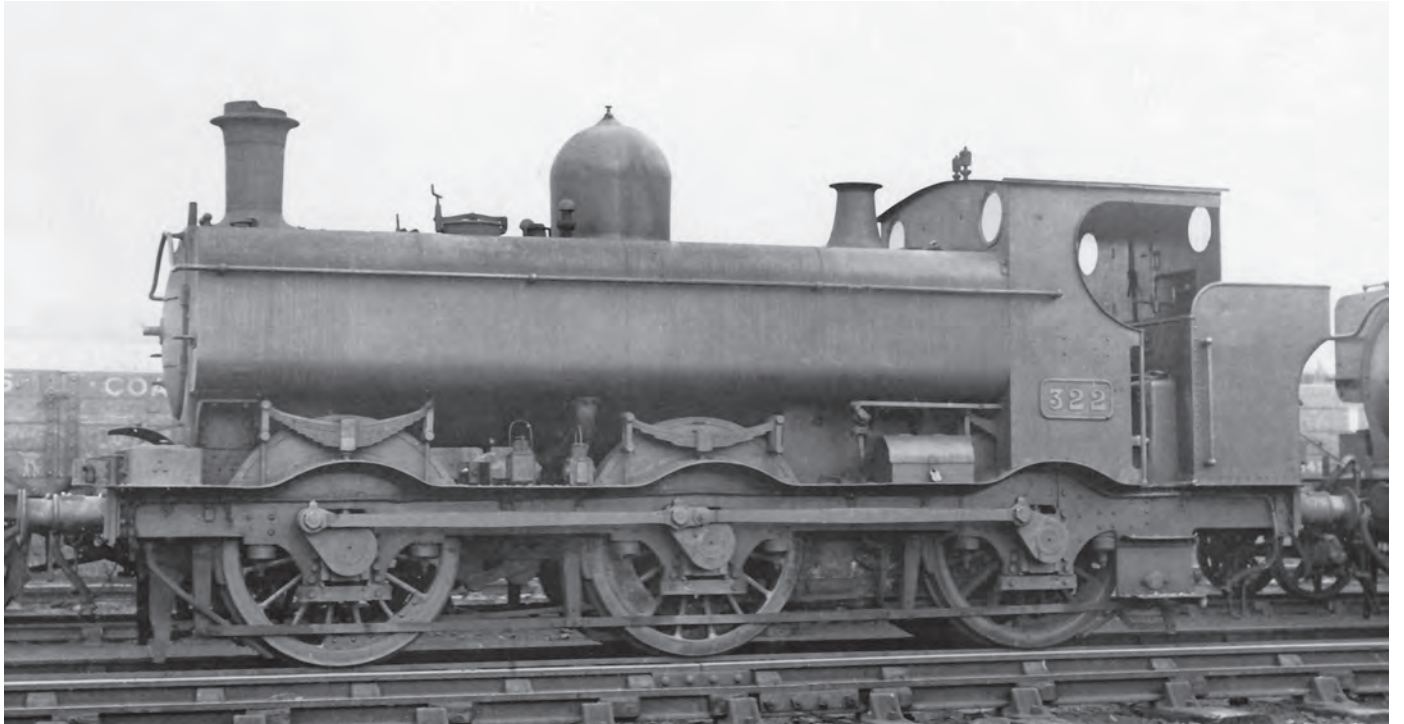

322, rebuilt with 1,200 gallon pannier tanks in April 1925, and withdrawn from Stourbridge in October 1930. It was the only one of the class with enclosed cab and enlarged bunker received at the same time as the new pannier tanks. (MLS/Bob Miller Collection)

325 and 326 were rebuilt in 1899 with domes on the front ring of the saddle tank. From 1918, all except 324 received Belpaire (B4) boilers and pannier tanks of 1,000 gallon capacity. These boilers were pressed at 165 lbs psi, with a heating surface of 1,142.6sqft and a grate area of 15.45sqft. With the increased boiler pressure, the tractive effort was upped to 18,010 lbs. Larger pannier tanks with 1,200 gallon capacity were fitted. None were fitted with an enclosed cab, except 322 which gained one in April 1925. 324 retained its saddle tanks and was withdrawn in 1921; it was the only one that was not rebuilt with pannier tanks.

All were originally based in Wolverhampton's Northern Division, though 324 quickly moved to Pontypool Road and 323 was briefly at Hereford. By 1922, two were at Tyseley, two at Stourbridge, one at Wolverhampton Stafford Road and one in South Wales at Penarth Dock. However, the majority spent their last days at Stourbridge and were withdrawn from there in the late 1920s or early 1930s, 323 being the last withdrawn in July 1932.

'1813' class, 1882-84 (Nos. 1813-1832, 1834-1853)

This variation of the 0-6-0T was the first designed by William Dean and was built at Swindon rather than Wolverhampton when the last series of the '1076 Buffalo' class had been completed. Whereas the 'Buffalos' had been double-framed, this class was single inside-framed and built with side rather than saddle tanks with a water capacity of 1,250 gallons. They had domeless flush-topped boilers with 140 lbs psi pressure, 17in x 24in cylinders, 4ft 6in diameter wheels. Total heating surface was 1,078sqft and the grate area was 16.4sqft. They weighed 39 tons 12 cwt with a maximum axleload of 13½ tons and exerted a tractive effort of 15,285 lbs. Tank capacity was modified to 1,180 gallons. Shortly after construction, the prototype, 1813, was sold to the Pembroke & Tenby Railway and became their No.7, acquiring the name *Holmwood*, the nameplates being placed in the centre of the

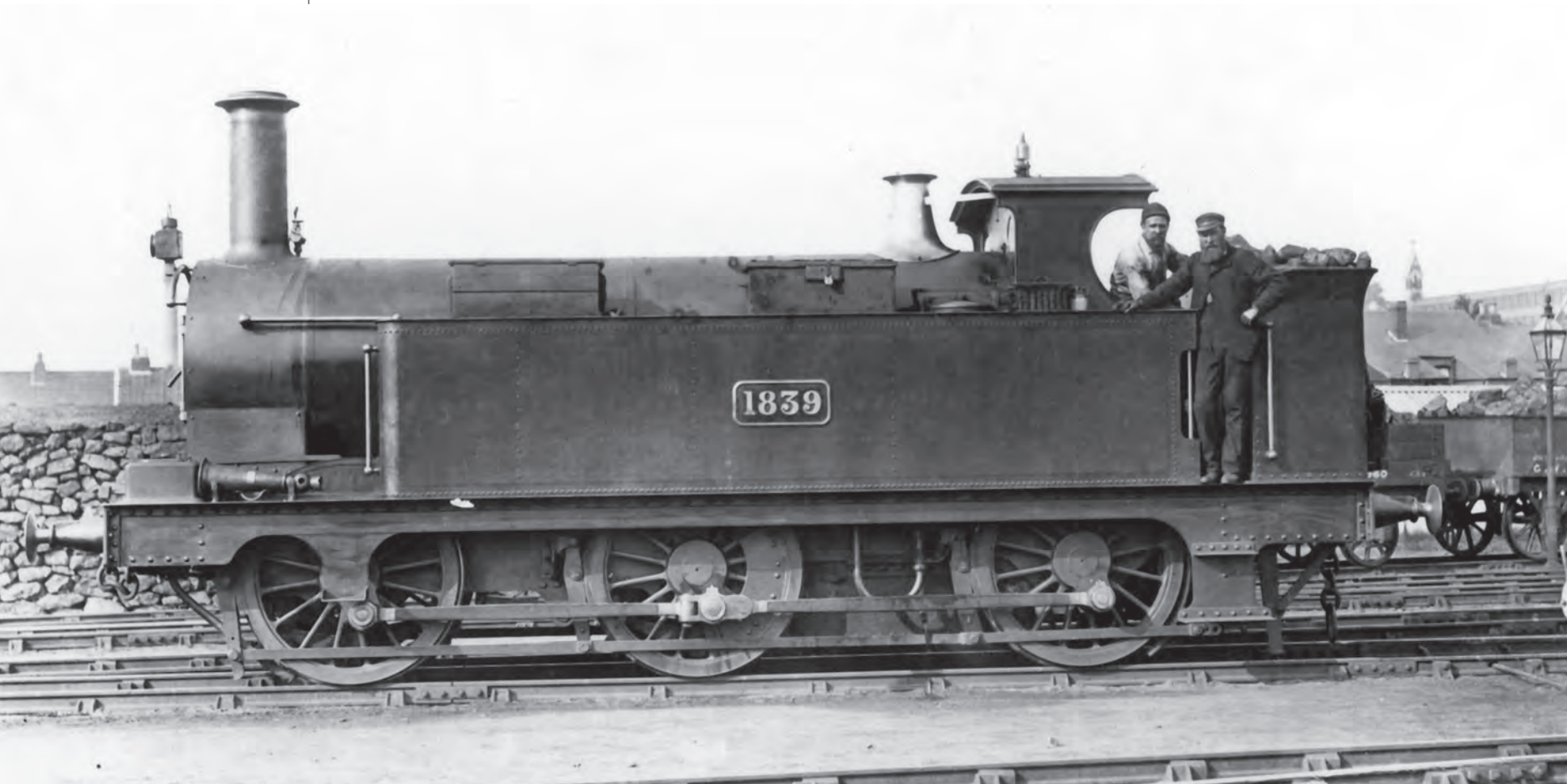

1839, as built in 1883 in its original form as a side tank, c1895. It was rebuilt as a saddle tank in September 1897 and as a pannier tank in 1920, being withdrawn from Worcester in 1938. (GW Trust/P.J. Reed Collection)

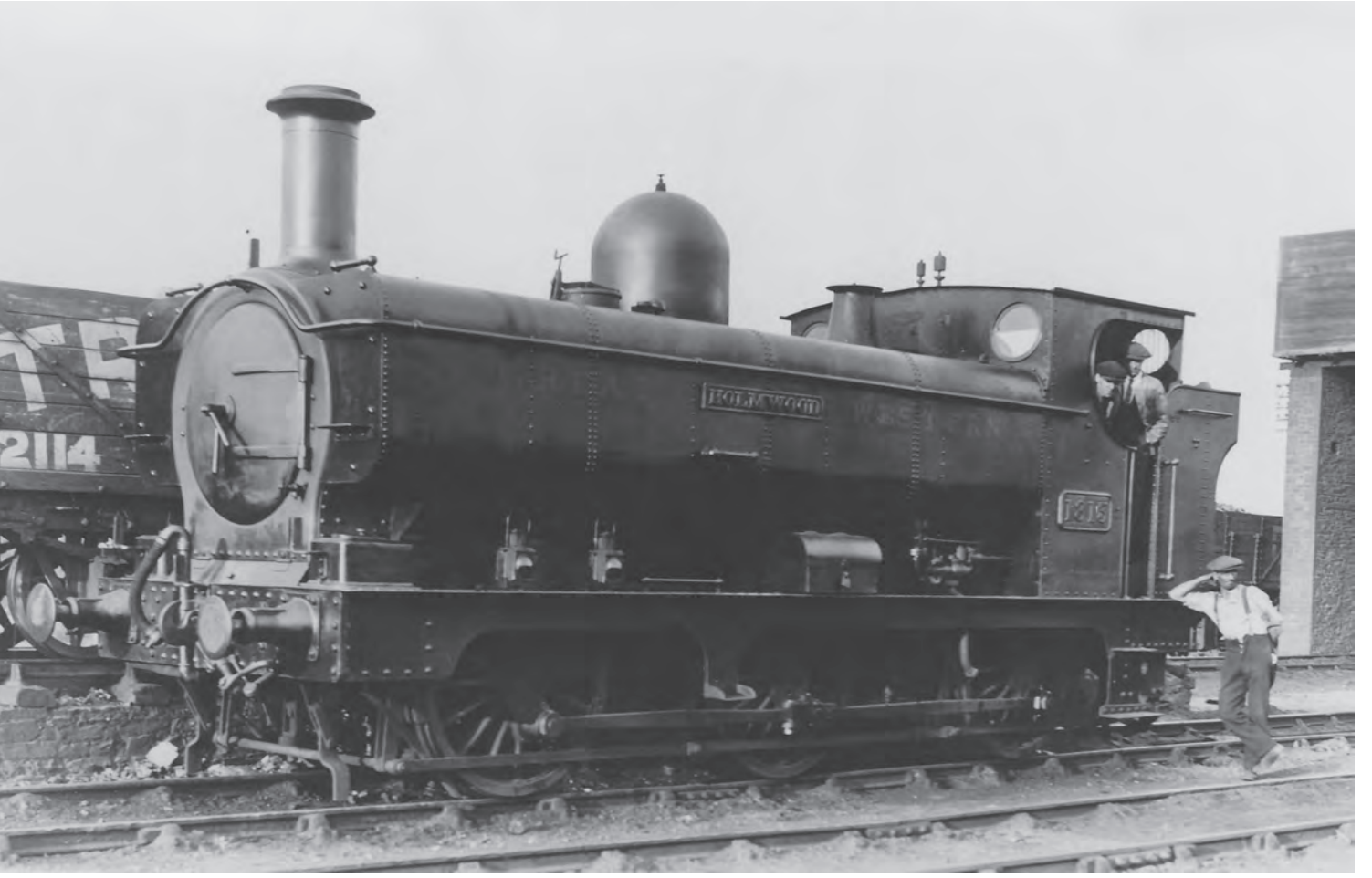

The prototype, 1813, built as a side tank by William Dean in September 1882, converted to a saddle tank in February 1897, and one of the first to be rebuilt as a pannier tank in July 1903. It acquired the name *Holmwood* during the time it was owned by the Pembroke & Tenby Railway and surprisingly kept the name when it returned to the GWR and its side tanks were replaced by a saddle tank. It is seen here still named on the side of the pannier tanks, c1927, before early withdrawal in July 1928. (MLS)

tanks. It was returned to the GWR in 1896 but retained its name until withdrawn in July 1928. It was the only 0-6-0 pannier tank to receive and retain a name throughout.

This relatively small class of forty engines was subject to much experimentation and alteration. Wheel diameter was soon increased to 4ft 7½in by thickening the tyres in similar fashion to the other 0-6-0Ts, but many were rebuilt with saddle tanks from 1894, although a couple retained side tanks until rebuilt with panniers. Some of this class were the earliest reconstructed as pannier tanks, between 1903 and 1906. Apparently, the panniers had been constructed for the last members of the 27XX tanks which had Belpaire boilers, but the latter were already in service before the tanks were ready, so they were fitted to members of the '1813' class going through the Works at the time. Just to complicate matters, there were two types of pannier tanks, short ones ending at the back of the smokebox and full length. Then, the engines so converted had different boilers. No.1813 from 1903 had the S4 boiler and short pannier tanks; 1817 in 1904 acquired full length tanks and the Belpaire B4 boiler; 1816 in 1906 had a rebuilt B2 boiler and full-length tanks, while 1814 and 1823 had B4 boilers and pannier tanks although whether short or long is not recorded.

After rebuilding with saddle tanks and S4 boilers (the majority between 1896 and the 1920s), the heating surface was increased to 1,307.72sqft, grate area to 17.33sqft, and boiler pressure to 150 lbs psi, increasing the tractive effort slightly to 15,935 lbs and the weight more substantially to 44 tons 12 cwt and maximum axleload to 15 tons 2 cwt. Tanks capacity was reduced to the 1,050-1,070 range. More engines

1850, built as a side tank in November 1883, rebuilt as a saddle tank in November 1895, but subsequently regaining its side tanks, was converted to the pannier tank form in May 1910 and is seen here shortly after that conversion. It was withdrawn in September 1938. (MLS/F. Moore)

1849, built in November 1883 as a side tank, rebuilt as a saddle tank in March 1897, was not converted to the pannier tank form until January 1926. It is here at Swindon shortly after that conversion which included enclosed cab and enlarged bunker. 1849 was withdrawn in August 1934. (MLS)

1826, built in 1882 as a 0-6-0 side tank, rebuilt in 1897 as a saddle tank and as a pannier tank in 1911, on a coal train at Abercynon off the Aberdare line, c1922. (John Hodge Collection)

were rebuilt with Belpaire B2 or B4 boilers between 1920 and 1925.

The more routine fitting of pannier tanks commenced in 1910, with the reconstruction of a number of saddle tank classes including the '1813s'. By 1927, all the class except 1829 had been fitted, with the early 1903-6 pannier tanks receiving the standard variety during normal works overhauls. Seven engines received them whilst still carrying S2 or S4 boilers (1813/21/25/26/50/51/53). The pannier tanks with the Belpaire boilers varied from earlier dimensions by having a total heating surface of 1,197.7sqft, grate area of 15.45sqft and boiler pressure of 165 lbs psi. Weight remained roughly the same at 44 tons 8 cwt, but maximum axleload was heavier at 15 tons 15 cwt, and tractive effort was 17,525 lbs. The standard pannier tank water capacity was 1,200 gallons. Nearly all the engines had their bunkers enlarged and twenty-one of the forty engines received enclosed cabs as indicated in the appendix. ATC equipment was fitted to many of the engines in 1930/1 (again, see appendix for details).

Being Swindon designed and built engines, they were allocated after construction to Southern Division Districts and all bar 1824 and 1835 stayed there. By 1905, the majority were active in South Wales, with nine at Newport, five at Llanelli, with seven at valley sheds. Seven were in the Bristol District and six at Plymouth/ Newton Abbot. By 1922, they were more widely spread, with Bristol having the largest cache (eleven) and Severn Tunnel having four, but twenty other depots had one or two examples, all motive power districts except Worcester having at least one. In addition to 1813's exile from the GWR in 1896, two more, 1825 and 1834, were transferred to the Rhondda & Swansea Bay Railway

in 1909 and 1907 respectively and found themselves re-absorbed in 1922. This wide dispersion remained the case, although by 1928 Bristol had lost most of its allocation and only Duffryn Yard (four) and Laira (three) had more than a couple. A few were based at GW outposts such as Carmarthen, Pantyffynnon, Weymouth, and Andover Junction and one each at Worcester, Leominster, Kidderminster and Stourbridge were the lone examples in the former Northern Division.

The first to be withdrawn was 1842 in 1928 and only one survived to be part of the nationalised system, though the 'Northern' 1835 at Stourbridge did not acquire BR livery or smokebox door numberplate, being withdrawn in January 1949. Most of the locomotives achieved between 500,000 and a million miles in traffic, with the highest, 1,068,039, credited to 1838 which was withdrawn in May 1947.

'1661' class, 1886-87 (Nos. 1661-1700)

This class of 0-6-0 saddle tank, built to Dean's design in 1886-7, was one of the less successful series of such engines on the GWR. The frames were originally ordered for Dean's '2301' class 0-6-0s, but the performance of earlier saddle tanks in South Wales on both short trip working and longer distance coal haulage encouraged Dean to build them as tank engines instead. Their shortcomings in operation were twofold. They had larger wheels – 5ft diameter – than the other saddle tanks, which made them less suitable for shunting and South Wales valley coal working and had unsatisfactory brake power for coal haulage in the valleys or longer distance heavy freight work. Although built ten years later than the successful 'Buffalo' class, they lasted no longer and in fact many were withdrawn by the late 1920s and others were sold to other South Wales railway companies in the early 1900s.

They had 17in x 26in cylinders (though some cylinder strokes were reduced to 24in subsequently), boiler pressure of 140 lbs psi, total heating surface of 1,157.1sqft, grate area of 15.2sqft and weighed 45 tons 18 cwt with a maximum axleload of 15 tons 14 cwt. Tank capacity was 966 gallons and tractive effort 14,902 lbs. Dean had reverted to double-frames which projected beyond the rear axle by just 5ft 9in, later increased to 6ft 4¼in. The wheel diameter increased

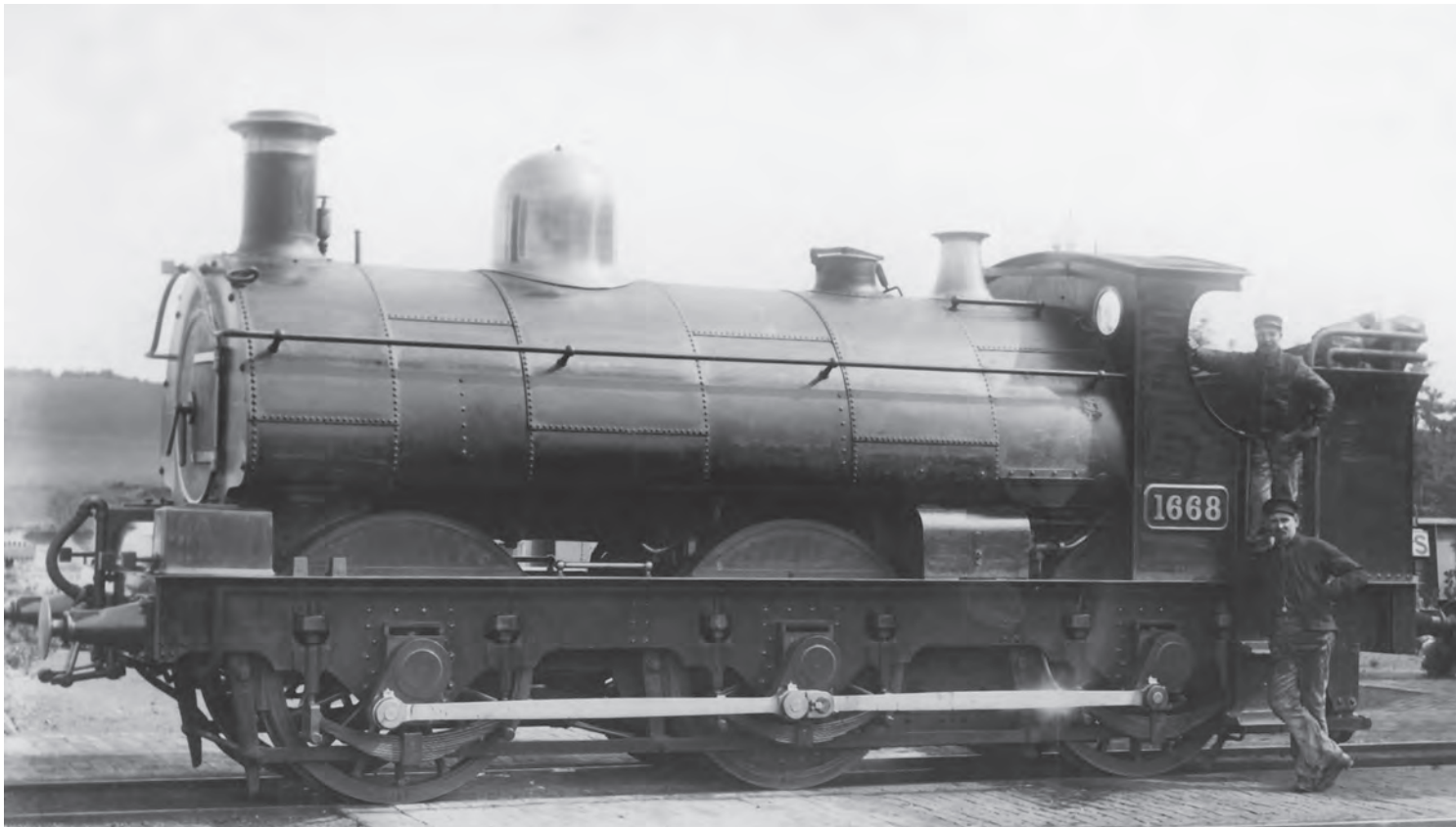

1668 as built in 1886 as an outside-framed saddle tank, in which form it remained until withdrawn in March 1911, c1895. (GW Trust/P.J. Reed Collection)

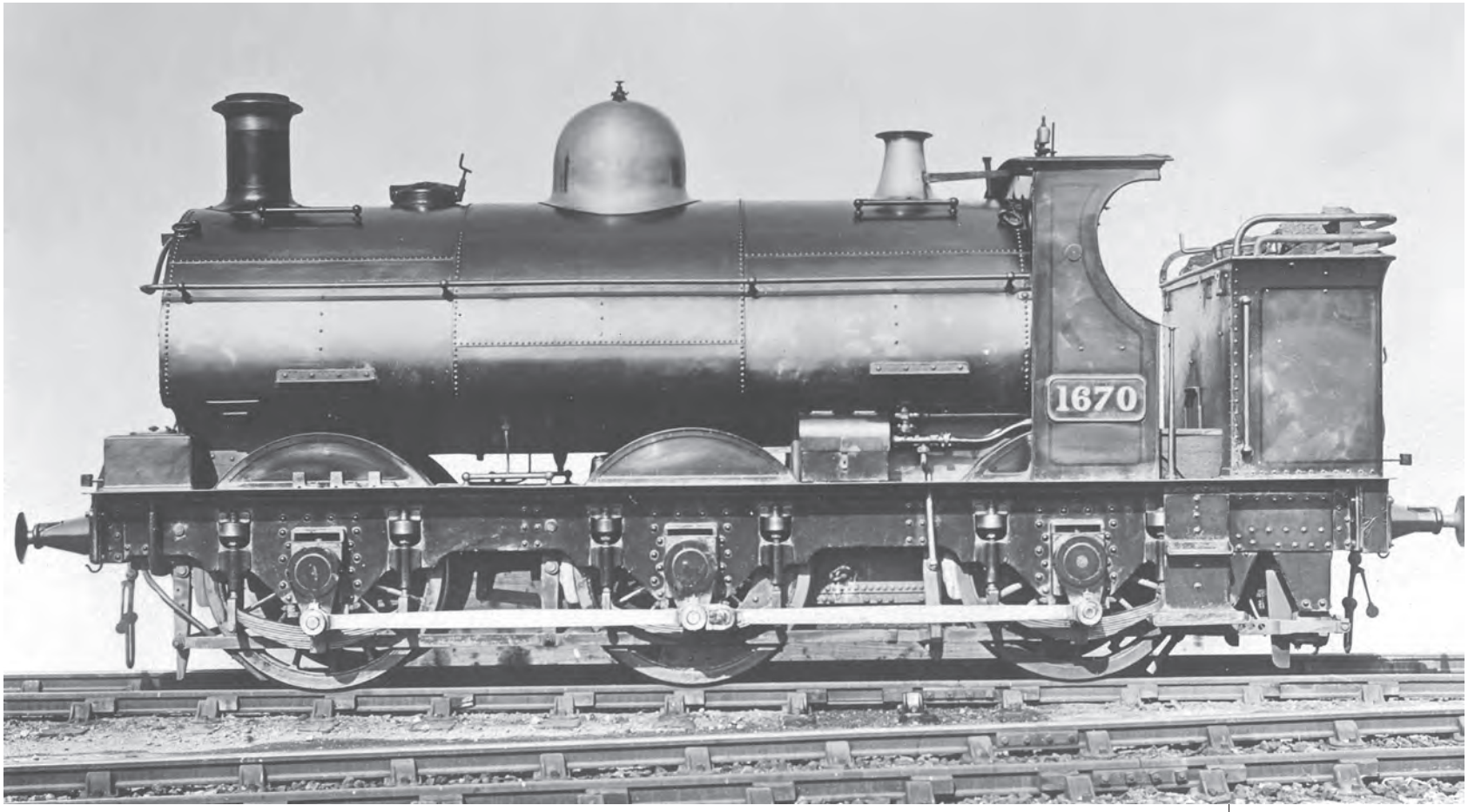

1670 as built as a saddle tank in August 1886. It was not rebuilt as a pannier tank and was withdrawn as early as January 1911. (Loco Publishing Co/John Hodge Collection)

further to 5ft 2in as the result of using thicker tyres.

Reboilering began in 1897 and continued through to 1905, eight engines receiving reconditioned S2 boilers, six the Belpaire B4 and the remaining twenty-six the S4 back domed boiler. Grate area of the S4 boiler was 17.33sqft with boiler pressure on some increased to 150 lbs psi. Tank capacity was increased to 1,080 gallons. The six with B4 boiler and saddle tanks – a comparatively rare combination – were 1662/68/72/89/92 and 1697. These had the B4 standard 15.45sqft grate area and heating surface of 1,197.1sqft and, unlike most other Belpaire boilered tanks, had 180 lbs psi pressure, raising the tractive effort to 18,545 lbs – not so useful if you can't reliably stop the train.

By 1911, four (1668/70/74 and 1692) had been withdrawn from traffic, and in 1922 the eight sold engines were absorbed back into GW stock. 1671/72/76 and 1679 were never converted to pannier tanks and were withdrawn between 1926 and 1928. In 1911, No.1691, and later 1673, were fitted with 1,095 gallon capacity panniers, adding nearly another couple of tons to the weight. 1690, the first pannier to be fitted with a Belpaire boiler, was returned to traffic in 1912 and with the robust higher pressure boiler weighed in at 46 tons 17 cwt. Sixteen of the pannier engines received enclosed cabs and twelve of these had enlarged bunkers (1666/79/93/98 did not). One of the engines sold to the Cardiff Railway, 1689, was provided with an enclosed cab by that railway. Most had been withdrawn before the 1930/1 programme of fitting the ATC apparatus and none were included in the provision.

All bar three (at Gloucester in the Worcester Motive Power District) were allocated to the Southern Division, most to share work with the '1076 Buffalos' in South Wales,

1689, sold to the Cardiff Railway in 1906 and fitted by that company with an enclosed cab, c1921. It was absorbed back by the GWR in September 1922 and converted to pannier tank form in March 1926, being withdrawn in October 1934. (MLS/Bob Miller's Collection)

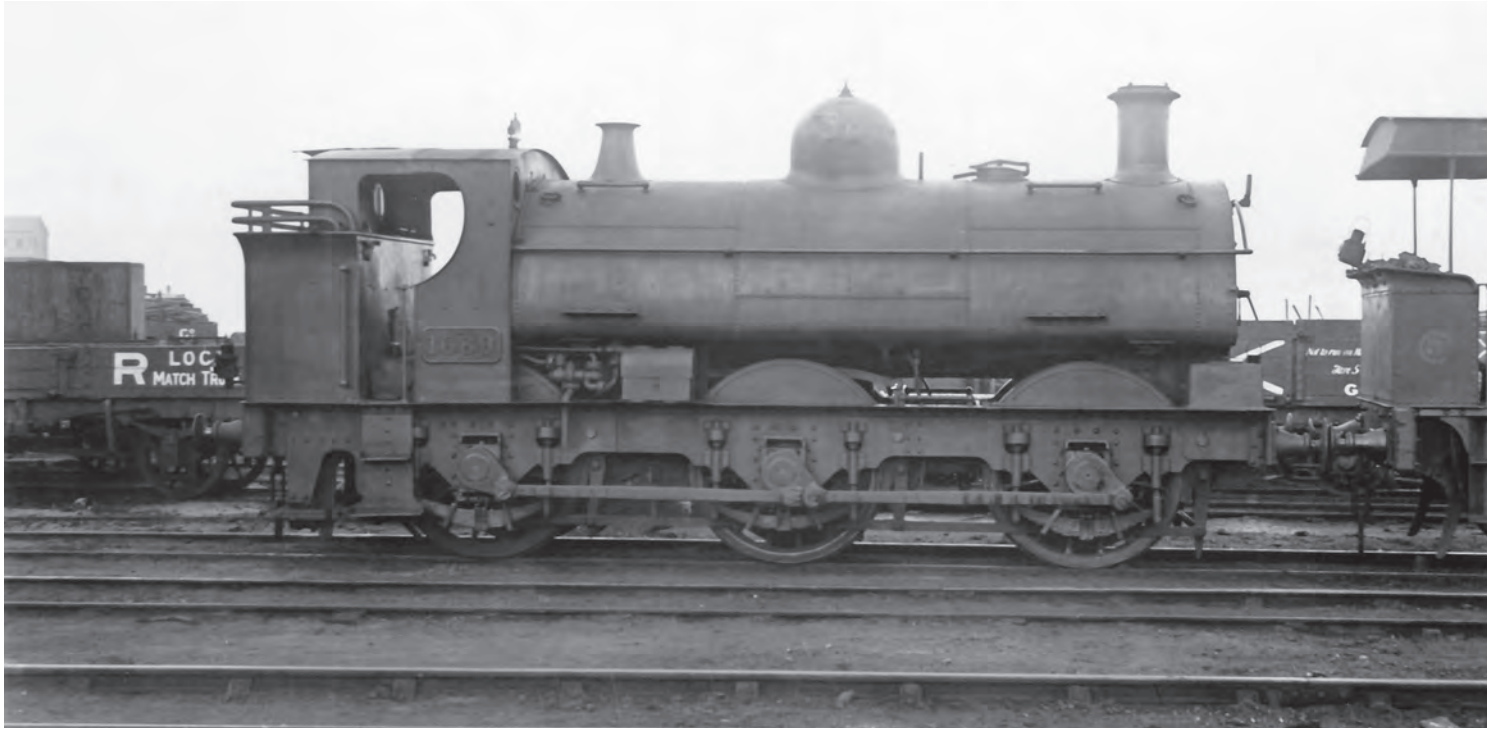

A '1661' class saddle tank at the re-opening of an iron mine on the West Somerset Mineral Railway near Watchet, with a Metropolitan Railway class 'A' 4-4-0T at the rear, 1902. (GW Trust)

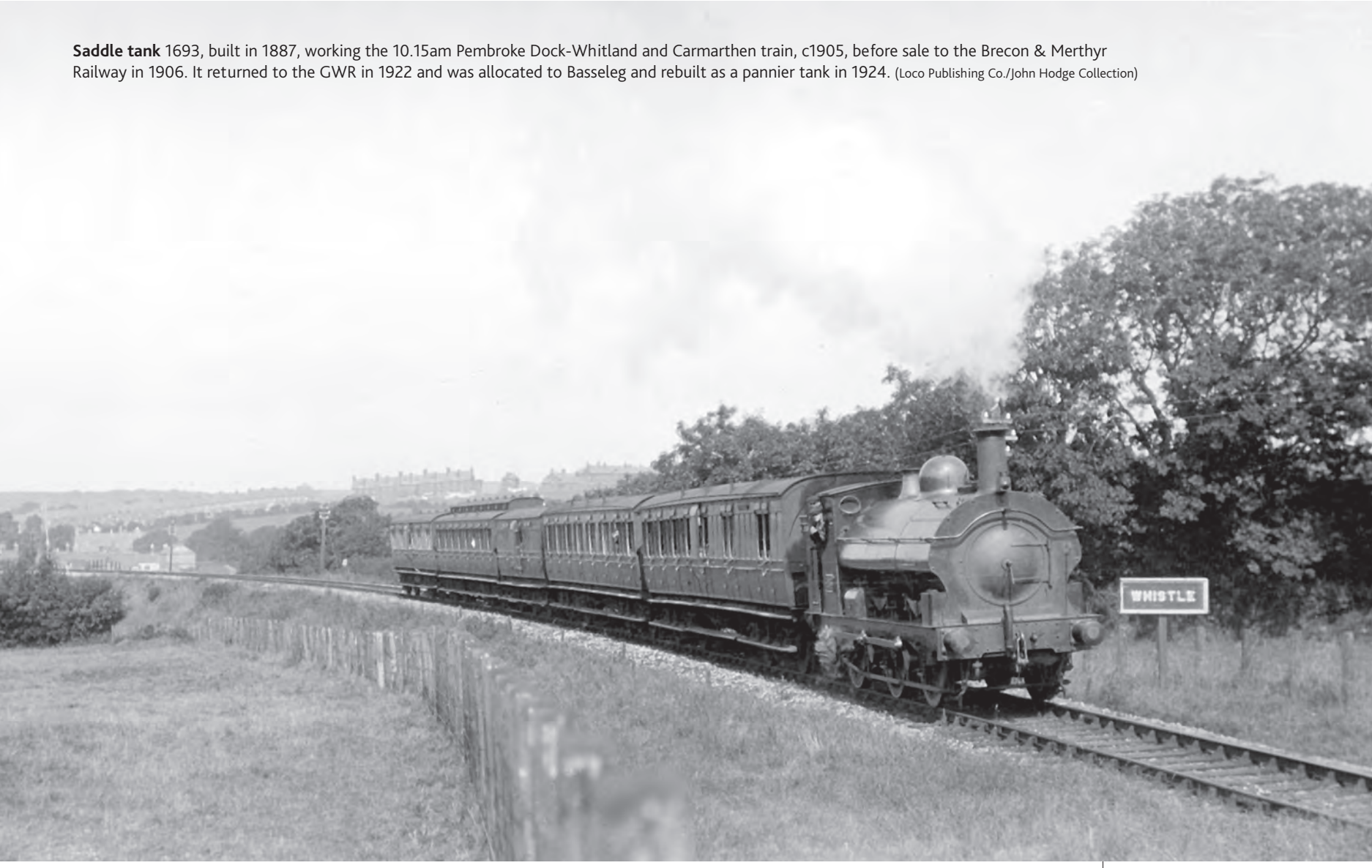

Saddle tank 1693, built in 1887, working the 10.15am Pembroke Dock-Whitland and Carmarthen train, c1905, before sale to the Brecon & Merthyr Railway in 1906. It returned to the GWR in 1922 and was allocated to Basseleg and rebuilt as a pannier tank in 1924. (Loco Publishing Co./John Hodge Collection)

but their braking capacity was soon found wanting on heavy freights. In 1905, eight were in the London District at Reading and Oxford and eight were also in the Bristol District, in that city and at Swindon. One (1661 itself) suffered an accident from this cause at Gaer Junction, Newport, killing its crew, and another, 1674, derailed when piloting a 4-4-0 on the 10.35 am Milford Haven-Paddington express at Loughor (near Llanelli) with resultant multi-fatalities. One of the contributory causes was the unstable riding of the saddle tank at the passenger speed required to time the train. All had left the West Country by 1918 and the main groupings in 1922 were at Newport (five), Cardiff Canton (six), Cardiff East Dock and Southall (three each). By the late 1920s just two were allocated to a Northern Division shed (Tyseley) in the few years before withdrawal – 1673 and 1690, both condemned in 1928. Newport had seven at Pill and Ebbw Junction, Southall had four and Canton still had three, and

The pioneer of the '1661' class, converted to pannier tank form in 1926 and withdrawn in February 1930, seen here, motion dismantled at Swindon, 1930. (GW Trust/ P.J. Reed Collection)

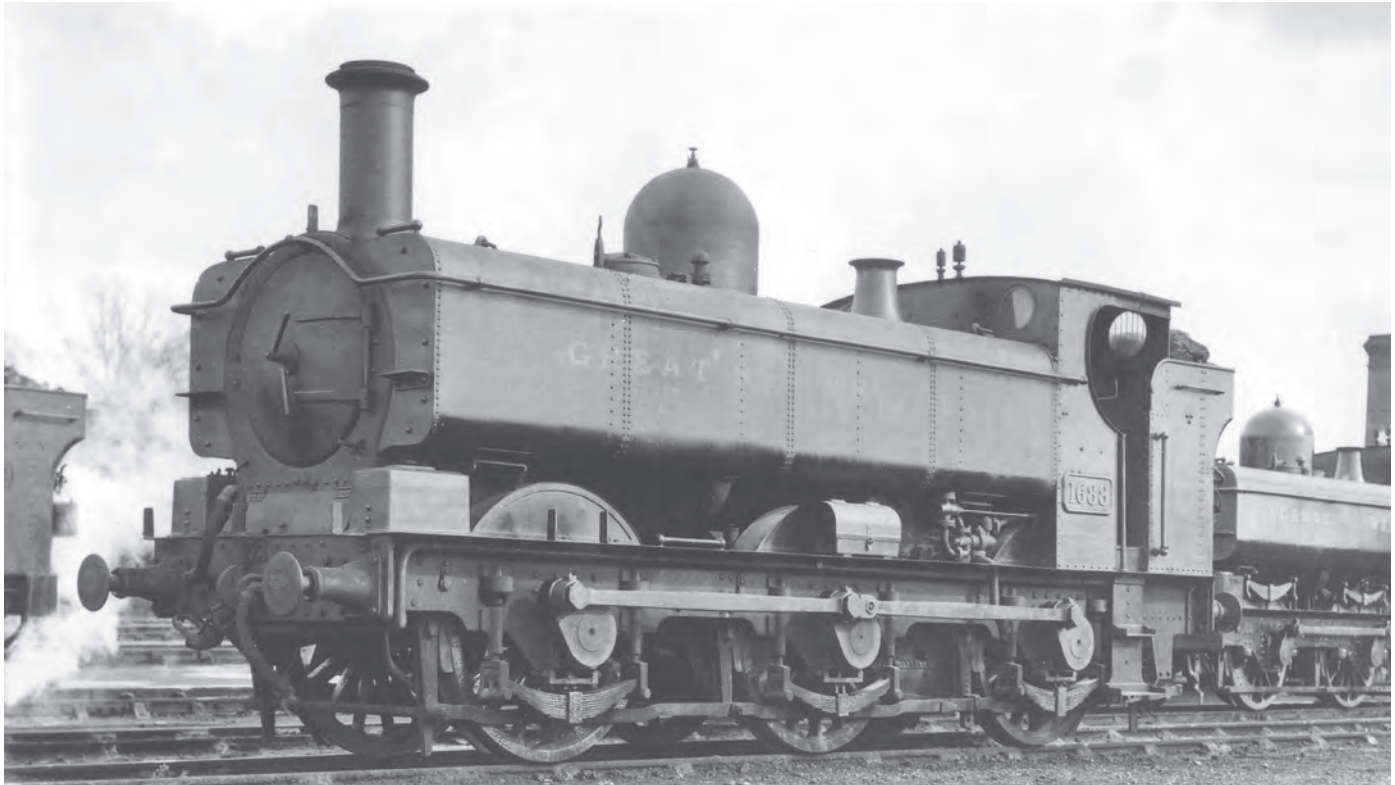

1688, built in January 1887 and rebuilt with pannier tanks in February 1926, at Oxford, 9 April 1927. It was withdrawn in April 1930. (H.C. Casserley/ John Hodge Collection)

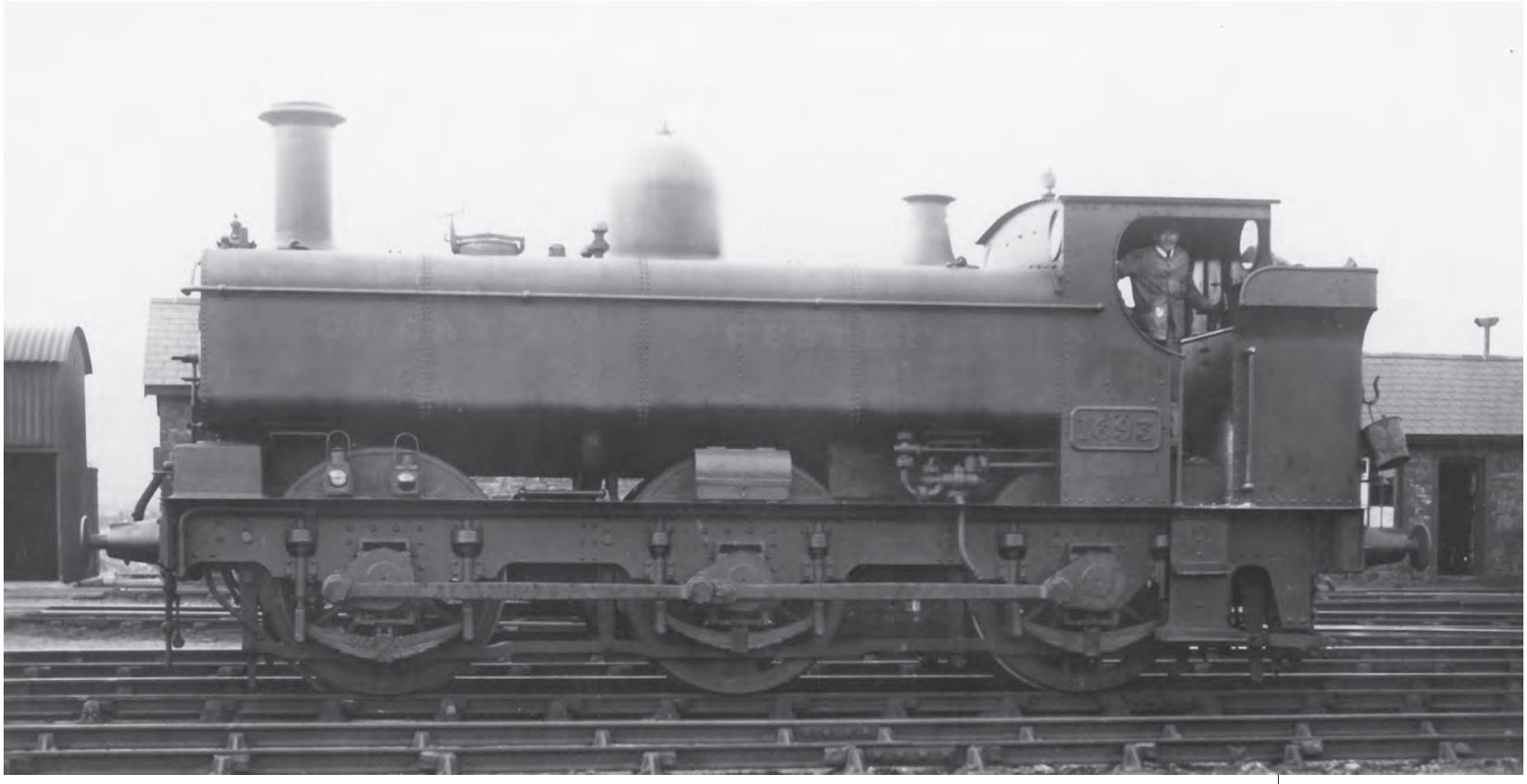

1693 after being returned from B&M ownership to the GWR in 1922 and converted to pannier tank form in 1926, at Newport, c1930. It was withdrawn a year later. (GW Trust/P.J. Reed Collection)

the rest were in 'penny numbers' in South Wales, apart from one each at Reading and Old Oak Common and two at Oxford. The engines achieved between 500,000 and 800,000 miles in traffic, none reaching a million miles as the oldest – 1685 withdrawn in October 1934 – was 48 years old, much less than most of the converted saddle tank classes.

'1854' class, 1890-95 (Nos. 905-907, 1701-1740, 1751-1770, 1791-1800, 1854-1900)

The numbering of this class of 0-6-0 tank engine is confusing with the order built not coinciding with the numerical order. 1854 was the first built in 1890, but the 1701 series built between 1891 and 1893 led to that group of locomotives being frequently referred to as the '1701' class. These saddle tanks were built with inside frames, the 1890-93 series being constructed with S2 front dome flush round-top boilers and the 1895 engines with S4 back dome boilers. Tank size varied – 1854-93's capacity was 1,080 gallons, 1701 – 1740 1,100 gallons and 1751 – 70 and the 1895-built engines 1,200 gallons.

The key dimensions were: cylinders 17in diameter x 24in stroke, wheel diameter 4ft 6in (later increased to 4ft 7½in through use of thicker tyres), boiler pressure 150 lbs psi, heating surface of 1,370.7sqft and grate area of 17.2sqft. The weight was 43 tons 8 cwt and the maximum axleload 15 tons. Tractive effort was 16,375 lbs. These saddle tanks had longer frames at the rear compared to the '1813' class with steel bunkers and rail fenders. As reboilering took place the differences between the various classes were minimised to details. Belpaire B2 and B4 boilers began to be fitted from 1900. With the B4 boiler the saddle tank capacity was reduced to around 950-1,000 gallons, a strong argument for their replacement by pannier tanks with 1,200 gallons. The new boilers were pressed at 180 lbs psi, but they were soon

1757, still in its original saddle tank form, built in 1897, hauling a freight train through New Radnor Forest from the quarry en route to Leominster, c1910. (GW Trust)

reduced to the later standard 165 lbs, giving a tractive effort of 17,525 lbs.

The '1854' class was one of the earliest to be fitted with pannier tanks, with 1864 in 1909 and six more in 1910. The fact that the vast majority of the class were fitted with the Belpaire B4 boiler was probably a significant factor in this. In this final format, other key changed dimensions were: total heating surface 1,197.7sqft, grate area 15.45sqft, weight 45 tons 12 cwt, maximum axleload 16 tons 6 cwt. The usual modifications were made at the time of the rebuilding with pannier tanks or later – provision of many with enclosed cabs, superheating, bunker enlargement, ATC from 1930 and the fitting of odd examples temporarily with spark arrester chimneys or auto-train equipment (details in the appendix).

1856, built in 1890, on a train from Merthyr at Cardiff Queen Street, c1923. (John Hodge Collection)

1856 on a Swansea-Merthyr train at Abernant, c1923.
(John Hodge Collection)

1859, built in March 1890, rebuilt with pannier tanks in June 1928, with a row of pannier tanks on Neath shed, 20 June 1937.
(F.K. Davies/John Hodge Collection)

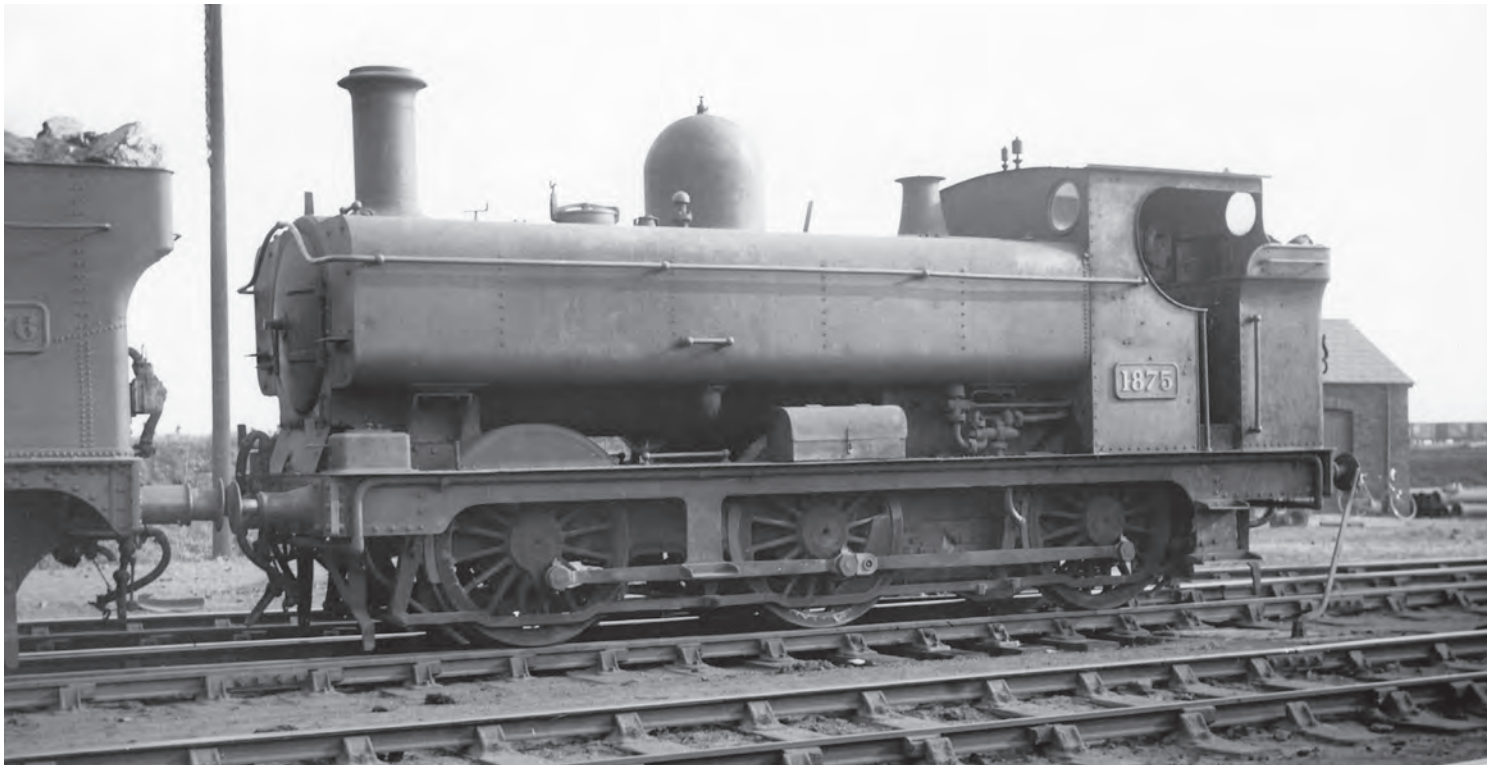

1875, built in November 1890, rebuilt with pannier tanks in February 1913 and later fitted with an enclosed cab but retaining a small bunker, at Severn Tunnel Junction, 22 May 1938. (F.K. Davies/John Hodge Collection)

1878, built in November 1890, converted to pannier tanks form in June 1920, at Merthyr, 17 June 1937. (F.K. Davies/John Hodge Collection)

1881, built in December 1890, rebuilt with pannier tanks in November 1918 and later with enclosed cab and enlarged bunker, at Yeovil, 13 July 1936. (F.K. Davies/John Hodge Collection)

1732, built in July 1892 and fitted with pannier tanks in August 1914, at Port Talbot, 26 May 1935. It received an enlarged bunker but retained its open cab, before withdrawal in July 1946. (F.K. Davies/John Hodge Collection)

1736, built in 1892 and converted to pannier tank form in 1924, standing ready with the breakdown train at Newton Abbot, 15 July 1936. (F.K. Davies/John Hodge Collection)

1768, built in January 1893 and rebuilt with pannier tanks in July 1918 with a Barry Railway 'F' class saddle tank at Port Talbot, 4 August 1935. (F.K. Davies/John Hodge Collection)

1793, built in May 1895, rebuilt with pannier tanks in February 1921, seen here c1923 before receiving an enclosed cab and enlarged bunker. (MLS)

1890, built in January 1891 and rebuilt with pannier tanks in July 1912, departing from Monmouth Troy with a passenger train to Ross-on Wye, the Wye Valley line curving away to the left, c1935. (GW Trust/P.J. Reed Collection)

An '1854' class pannier tank pauses at Totnes with a pick-up goods train, c1910. Totnes station still retains the original South Devon Railway Brunel buildings. (GW Trust/P.J. Reed Collection)

Most of this class were allocated to Southern Division sheds, especially in South Wales, with large groups at the Newport sheds, Severn Tunnel Junction, Tondu and Llantrisant and thirteen at Landore and Neath. Bristol had nine and the Newton Abbot District had twenty-nine in 1905 at Newton Abbot itself, Laira, Taunton, Truro and St Blazey. By 1922, a substantial proportion of the Newport engines had been dispersed, with more going to Aberdare and Llanelli in South Wales, but eight going to Old Oak Common and four to Southall. Ten years later, the Newport engines had regrouped with Ebbw Junction and Pill now sharing twenty engines, Duffryn Yard and Neath gaining at the expense of the London and Bristol Districts. Newton Abbot had also regained a few and Merthyr, Cardiff East Dock and Yeovil received four or five each. Four went north after the 'Grouping' and a few more followed after 1930.

At the beginning of 1935, sixty-four were in South Wales, with eighteen in the Newton Abbot, fourteen in the London and Bristol and three in the Worcester motive power districts. Many of the class exceeded a million miles in traffic, the highest being 1760 with much of its career spent in the West Country at Taunton and St Blazey, with 1,156, 329. The majority were withdrawn between 1928 and 1950, the last survivor being the 1895-built 907, condemned from Didcot in March 1951.

'655' class, 1892-97 (Nos. 655, 767, 1741-1750, 1771-1790, 2701-2720)

The '655' class were in many ways a later continuation of the '645' and '1501' classes, but with longer

inside frames. Two were built in February 1892 and immediately took the vacant numbers of the two '645' class locomotives sold in the mid-1870s, 655 giving its number to the class. 1741-1750 were then built between March and August 1892 and after a short break 1771-1790 were on a continuous production line between December 1892 and June 1894. A final batch of twenty locomotives (2701-2720) was constructed between January 1896 and February 1897.

Dimensions were very similar to the '645s'. Two 17in x 24in cylinders, 4ft 6in diameter wheels, 140lb psi boiler, heating surface of 1,228sqft and 15.16sqft grate area. With tank capacity of 1,000 gallons, the engine weighed 41 tons 4 cwt, with maximum axleload of 14 tons 6 cwt. By the 2701 series, thicker tyres had increased the wheel diameter to 4ft 7½in and increased the weight by a ton. Most of them retained their original boilers whilst older saddle tanks were being renewed in the 1890s, and nearly all the locomotives in this class went therefore straight to Belpaire B4 boilers at the same time as their saddle tanks were replaced by the pannier variety.

All of this class with the one exception of 1778 were converted to pannier tanks between 1912 and 1930 and received the Belpaire boilers, increasing the boiler pressure to 165 lbs psi and weight to 42 tons 18 cwt, but more importantly, increasing their theoretical power to 17,525 lbs tractive effort. Over half received superheated boilers and many received enlarged bunkers, increasing the capacity from two to three and a half tons of coal. A number of the engines received enclosed cabs as indicated in the appendix.

Like the '645' class, these single-framed 0-6-0STs were allocated mainly to sheds in the Northern Division, with just 1746 and 1789 being recorded initially in the South and 2715 in Central Wales.

Saddle tank No.2704, built in March 1896, before conversion to pannier tank form in March 1930, c1925. (MLS)

2704, now converted as a pannier tank with enlarged bunker, but retaining its open cab, being coaled at Oxley shed, 13 September 1936. It was withdrawn in March 1950. (F.K. Davies/ John Hodge Collection)

By 1905, twenty-seven were at Wolverhampton itself, five at Tyseley, four at Stourbridge and seven others in that district. Two had migrated to Newport, two to Worcester, one to Hereford and one to Laira.

However, after 1922 they were dispersed throughout the GWR, although the Northern District still had the majority, with fourteen at Wolverhampton, ten at Tyseley, five at Stourbridge, four at Leamington and four at Wellington. By the late 1920s, the Wolverhampton flock had all gone and Tyseley was down to four. Croes Newydd now had the largest allocation – eleven – and Stourbridge had six. There were examples at Shrewsbury, Trawsfynydd, Bala, Pantyffynnon, Leominster, Oswestry, Tondu, Duffryn Yard, Bristol St Philips Marsh, Swindon, Taunton, Weymouth (three) and Truro.

Most ran between 600,000 and 700,000 miles in traffic, with 1789 achieving the highest at 1,069,716 (working in later years from Weymouth). Although a few were scrapped before 1930, most lasted to the end of the 1930s and there were still 39 in service (or store) after the Second World War. Twenty-one passed into BR ownership but none lasted long enough to be repainted in BR livery or get a smokebox numberplate. The last survivors were congregated at Croes Newydd and Stourbridge with individual survivors at Trawsfynydd, Duffryn Yard, Pantyffynnon, Leominster, Oxford, Taunton, Weymouth and Truro. A dozen survived until 1950, a time when the Western Region was being flooded with Hawksworth's 84XX and 94XX, the last two survivors being 1782 (at Truro) and 2719 (at Croes Newydd) withdrawn in November 1950.

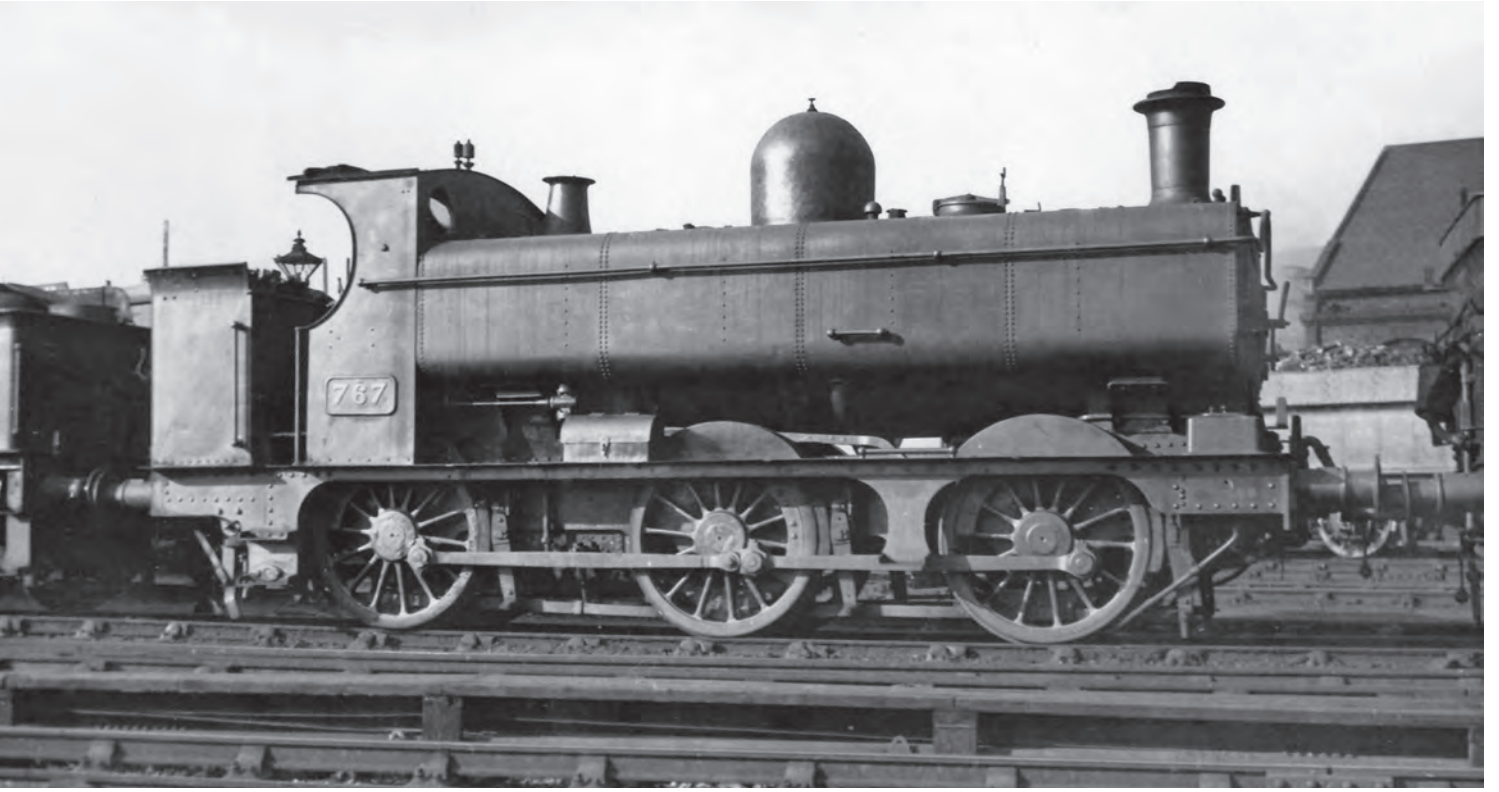

'655' class No.767, built in February 1892, and converted as a pannier tank in March 1921, took the number of an earlier '645' class engine sold to the South Wales Mineral Railway in 1875. It is shown here shortly before withdrawal in October 1934. (MLS)

1777, built in March 1893 and fitted with pannier tanks in December 1923, with original open cab and small bunker, c1935. It was withdrawn in July 1941 from St Blazey shed. (GW Trust/P.J. Reed Collection)

1788, built in February 1894 and rebuilt as a pannier tank in February 1919, at Stourbridge, 13 September 1936. It appears to have sustained collision damage along the running plate. It was withdrawn in November 1945. (F.K. Davies/John Hodge Collection)

A '655' class pannier tank, 1742, built in March 1892, stands on snowplough duty at Oxford, in March of the severe winter of 1947. (GW Trust/P.J. Reed Collection)

A '655' class pannier tank in the 1896 built 27XX series, departs Taunton with a passenger train bearing express headcode towards Bridgwater and Weston-super-Mare, c1925. (GW Trust/P.J. Reed Collection)

2704, built in March 1896 and rebuilt as a pannier tank in March 1930 on a freight at Oxley, 14 September 1936. (GW Trust/F.K. Davies)

2718, built in December 1896 and rebuilt as a pannier tank in 1917, with the evening Longbridge Austin Works-Halesowen workmen's train crossing Dowery Dell Viaduct, between Hunnington and Halesowen in the late 1930s. Although regular passenger traffic ceased in 1919, the daily workmen's trains continued until 1960. (GW Trust/P.J. Reed Collection)

A '655' class pannier tank pulls away with a coal train past the derelict 1741 at Cefn Coed, in April 1950. 1741 was built in 1893, rebuilt with pannier tanks in 1919 and sold to the Amalgamated Anthracite Collieries at Gwain-cae-Gurwen in January 1939 and eventually scrapped in 1952. (GW Trust)

'2721' class, 1897-1901 (Nos. 2721-2800)

This class of saddle tank was built at Swindon at roughly the same time as the '2021' class was being built at Wolverhampton. The '2721' class was the larger of the two types, with 4ft 7½in coupled wheels, 17in x 24in inside cylinders and were basically a development of the '1854' and '655' classes with detailed differences – coil springs above the axleboxes and fluted coupling rods, as well as being built with the thicker tyres. They were constructed with the S4 boiler, with 150 lbs psi pressure, heating surface of 1,307.7sqft, grate area of 17.33sqft, and weighed 47 tons. The maximum axleload was 15 tons 15 cwt and their tanks held 1,120 gallons of water. 2721-2778 were built between 1897 and October 1900.

2779-2795, constructed from October 1900 to February 1901, had slightly enlarged cylinders, 17½in x 24in and extended smokeboxes which increased the weight by two cwt and increased the tractive effort from 15,935 to 16,885 lbs. Then a final batch of five locomotives, 2796-2800, were built with Belpaire B4 boilers and piston valves (replaced by slide valves later), also with 17 ½ in diameter cylinders, heating surface of 1,329.4sqft, a smaller standard grate area of 15.45sqft and a smaller tank capacity of 940 gallons. The B4 boiler was pressed at 165 lbs psi, so tractive effort was again up at 18,575 lbs. The total weight increased to 47 tons 14 cwt and the axleweight was almost 16 tons. When the new Churchward 2-8-0 was renumbered 2800 in December 1912, the '2721' engine of that number became 2700.

Boiler rebuilding, as with other earlier saddle tanks, took place shortly after construction with B4 boilers, but the interchangeability between the various 0-6-0 saddle tanks meant that the '2721s' also finished with a mixture of S4 and B4 (and even S2 boilers off the '1854' class). Belpaire 2796 retained its B4 boiler, but the others reverted to the S2 or S4 type whilst nine of the earlier engines received the B4.

With the Belpaire raised firebox, experiments were made with types of pannier tanks. As early as 1904, 2796 received short tanks holding 1,165 gallons (replaced later by full length tanks). Eventually, all eighty engines of the class received Belpaire B4 boilers and full-length pannier tanks. Final dimensions differing

2760, built as a saddle tank, in August 1899 at an unknown location before building with pannier tanks in March 1916. (MLS/T. Guest)

'2721' class saddle tank 2729 built in September 1892 waiting to carry out shunting duties at Shepton Mallet High Street while side tank class '517' 0-4-2T approaches with a passenger train from Witham to Yatton, c1900. (GW Trust/P.J. Reed Collection)

from the original construction were: heating surface, 1,197.7sqft, grate area 15.45sqft, boiler pressure 180 lbs psi (some were later reduced to 165 lbs psi), weight 46 tons, tractive effort 20,260 lbs (of the engines with 180lbs pressure). Some were later superheated. Two, 2783 and 2784, were fitted with spark arrester chimneys for use at the Provender and Royal Ordnance Depots, Didcot, during the Second World War, and many were fitted with enlarged bunkers holding 3½ tons of coal. Forty-one of the eighty engines received enclosed cabs, including 2743 whilst still a saddle tank. All bar four were fitted with ATC equipment in 1930-31.

Forty-two of the class were allocated to South Wales depots in 1905, the largest concentrations being at Newport, Severn Tunnel Junction, Cardiff and Llanelli. The London Division had seven, all based at Southall, Bristol had six and Gloucester four, the rest in 'penny-numbers' over the Southern Divisions with just one solitary example in the north at Birkenhead. In 1925, after a substantial number had been modified as pannier tanks, they were allocated as follows:

Newport Division Sheds:
- Newport Ebbw Jcn & Pill
- Cardiff Canton & East Dock
- Severn Tunnel Junction
- Aberbeeg
- Llantrisant
- Pontypool Road
- Aberdare

Neath Division Sheds:
- Neath
- Landore
- Swansea East Dock
- Llanelli

London Division Sheds:
- Reading
- Southall
- Didcot
- Oxford

Bristol Division Sheds:
- Bristol Bath Road & SPM
- Swindon
- Yeovil

2766, built in August 1900 and rebuilt with pannier tanks in April 1918, with a Merthyr-Aberystwyth train near Merthyr, c1920. (Jowhn Hodge Collection)

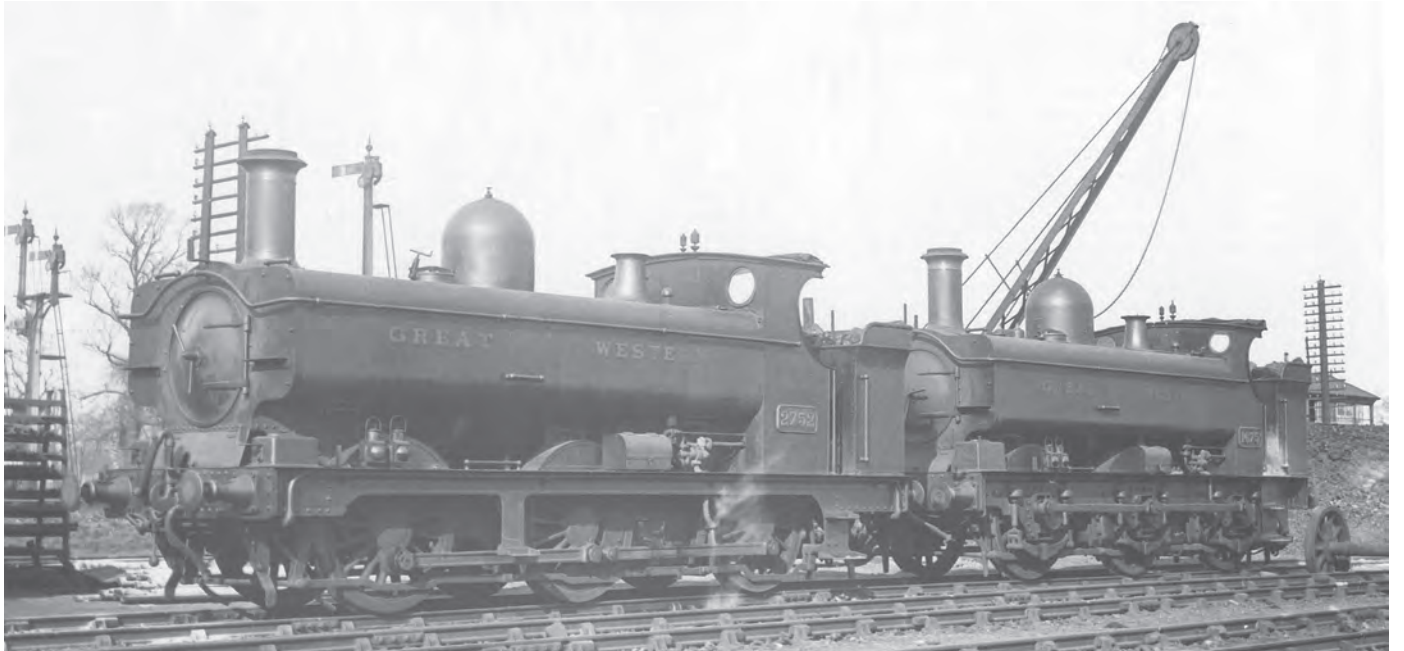

2752, built in June 1899 and rebuilt with pannier tanks in November 1912, in the company of '1661' class outside-framed 0-6-0PT 1675 which was built in 1886, at Southall, March 1920. (J.N. Maskelyne/ John Hodge Collection)

2725 built in March 1898 and rebuilt as a pannier tank with enclosed cab and enlarged bunker in September 1922. (MLS/F. Moore)

2757, built in August 1899 and rebuilt with pannier tanks in July 1911, ex works from Wolverhampton, after fitting with enclosed cab and enlarged bunker, c1923. (MLS)

2783, built in January 1901 and rebuilt with pannier tanks in October 1913, at Didcot, fitted with spark arrester chimney for shunting in the Ordnance depot at Milton, 26 September 1937. (F.K. Davies/John Hodge Collection)

Newton Abbot Division Sheds:
- Laira
- Newton Abbot

Worcester Division Sheds:
- Gloucester
- Hereford

Wolverhampton Division Sheds:
- Stafford Road
- Birkenhead
- Stourbridge
- Tyseley

By 1922, Tondu had gained the largest number (ten) followed by Cardiff (eight), Pontypool and Newport (seven each). After 1930, with the new 57XX Collett 0-6-0PTs replacing them in the more arduous duties in South Wales and Bristol, they became widely distributed throughout the railway with nine making their way to the Wolverhampton District. Forty-four were still extant at nationalisation, with Newport retaining six, Pontypool four, Llanelli, Duffryn Yard and Cardiff East Dock three, with the other survivors at Neath, Merthyr, Swansea East Dock, Pantyffynnon, Bridgend, Shrewsbury, Croes Newydd, Wolverhampton, Leamington, Stourbridge, Southall, Worcester, Evesham, Gloucester, Bristol SPM, Taunton, Newton Abbot, Laira, St Blazey and Penzance.

Mileages achieved ranged from 767,367 (2732) to in excess of a million (2721 and 2761). They were all withdrawn between 1945 and 1950, four being retained after withdrawal for a few months in 1947

2755, built in July 1899, rebuilt with pannier tanks in July 1926, shunting at Exeter St David's, 14 July 1936. (F.K. Davies/John Hodge Collection)

2738, built in August 1898 and provided with pannier tanks in August 1912, at Swindon Dump on 7 May 1950 following withdrawal in December 1949. (MLS)

2794, built in February 1901, rebuilt with pannier tanks in February 1916, and sold to the Lilleshall Company in October 1950 after withdrawal from BR service in November 1948, here stripped of its BR identity apart from GW numberplate, c1952. (MLS)

to act as Swindon Works shunters (2723/31/33/35). The forty-four that survived to become British Railways' property did not receive smokebox door numberplates or the BR 'lion and wheel' insignia. The last survivors were 2743 (at Worcester), 2754 (at Cardiff East Dock) and 2760 (at Merthyr), withdrawn in October 1950, and 2722 (Neath) and 2744 (Shrewsbury) condemned a month later. One, 2794, withdrawn from Ebbw Junction in November 1949, was sold to the Lilleshall Company in Shropshire in October 1950, and was technically the last survivor of all, though its final scrapping date is unknown.

'2021' class, 1897-1905 (Nos. 2021-2160)

The '2021' class was a slightly larger modernised version of the Wolverhampton '850s' that – as was customary – was split into two series and was known initially by different class numbers, the '2021' and '2101s'. 2021-2100, built between 1897 and 1901, had round top raised fireboxes with the dome on the front ring of the saddle tank, and short smokebox. Their principal dimensions were: two 16½in x 24in cylinders, 4ft 1½in diameter wheels, 150 lbs psi boiler, grate area of 14.5sqft, and total heating surface of 1,018.75sqft. They weighed 40 tons 14 cwt with an axleload of 13 tons 12 cwt and like the '850' class, had a short wheelbase of 14ft 8in, just one foot extra to cater for the longer fireboxes. They were able to negotiate curves of 4 chains radius. The saddle tank had the capacity for 1,000 gallons and the tractive effort was 16,830 lbs. They were built with boiler type R2/3, which was extended later to include a longer smokebox. Like many of the other saddle tanks, some were equipped later with enclosed cabs and larger bunkers.

The '2101' series were built later between 1902 and 1905, the main differences being the use of

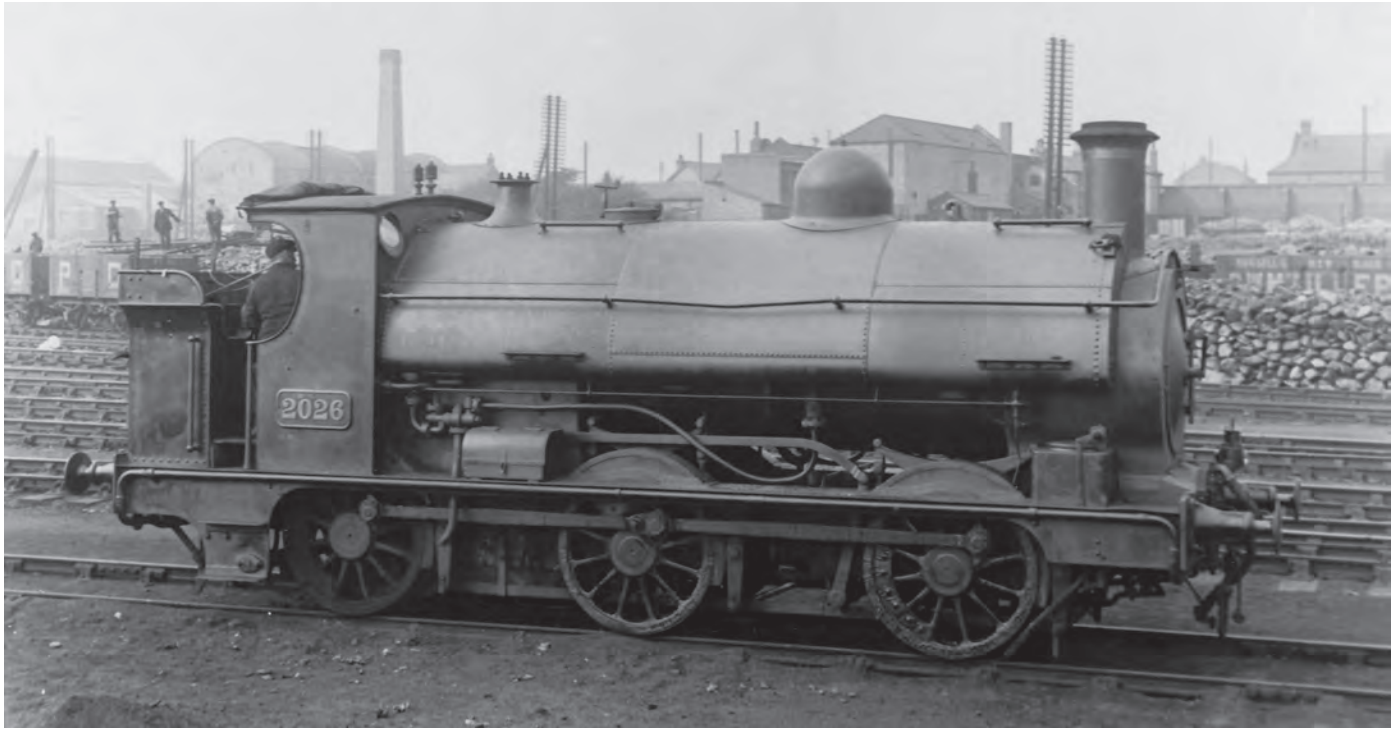

Saddle tank 2026, built in May 1897, with the R2/3 boiler, centre dome and extended smokebox before rebuilding as a pannier tank, c1920. It was reconstructed as a pannier in September 1922 and in that form, withdrawn in April 1951. (MLS)

Saddle tank 2028 alongside 'Duke' 4-4-0, 3273 *Mounts Bay,* on Shrewsbury shed, 2 August 1936. (F.K. Davies/ John Hodge Collection)

domeless boilers with Belpaire firebox of type BR0 and extended smokeboxes. Later, many of these boilers were exchanged with '2021' boilers as the engines went through Works as they were interchangeable. These boilers were pressed to 165 lbs psi, with a grate area of 14.7sqft and heating surface of 1,054.13sqft and gave the engine an increased tractive effort of 18,515 lbs. They weighed 16 cwt heavier than the '2021' class engines. The last of the BR0 boilers survived until 1948 on one of the earlier engines, 2048, which received it during overhaul in 1918, and did not lose it until it belatedly was converted to a pannier tank – the last to be so modified.

Two of the '2101' series had somewhat exotic existences. 2120 received a short 'square' saddle tank in 1906 with a dummy coach work shell painted in chocolate and cream! It was fitted with auto-train equipment and intended to work from Plymouth in the middle of four coach auto sets. 2140 was treated in similar fashion for operating from Newton Abbot. The simulated coachwork was removed by 1911.

2140 became a standard pannier tank in 1916. 2120 retained its square tank but received a normal cab and extended bunker and spark arresting chimney in 1915. It was converted to a standard pannier tank in 1920. Two others, 2118 and 2135, was also equipped for auto-train working, but retained their conventional appearance.

As with the other GW saddle tanks, the '2021' and '2101' classes were converted to pannier tanks, though many were not modified until the 1930s as the boilers and tanks were newer than those on other classes. Most by then had received the Swindon Belpaire B4 boiler, though thirty-eight still had their BR0 boilers and a few still had the original R2/3 boilers (2038/78/83/94/96 and 2145). The final form for the pannier tanks with the B4 back dome boiler gave a few altered dimensions, thus: grate area 14.4sqft, heating surface 994.47sqft, 900 gallon tank, weight 38 tons, maximum axleload 13 tons 17 cwt. Tractive effort was recalculated at 18,515 lbs. Those engines with enlarged bunkers weighed an extra one ton and 15cwt. Further engines were fitted for auto work and most of these were also fitted with ATC from 1931 (for details of those fitted, see appendix).

2140 as modified with square pannier tanks and dummy coach outline over cab and bunker, for 'streamlined' auto working (!) at Plymouth, 1906. (GW Trust/P.J. Reed Collection)

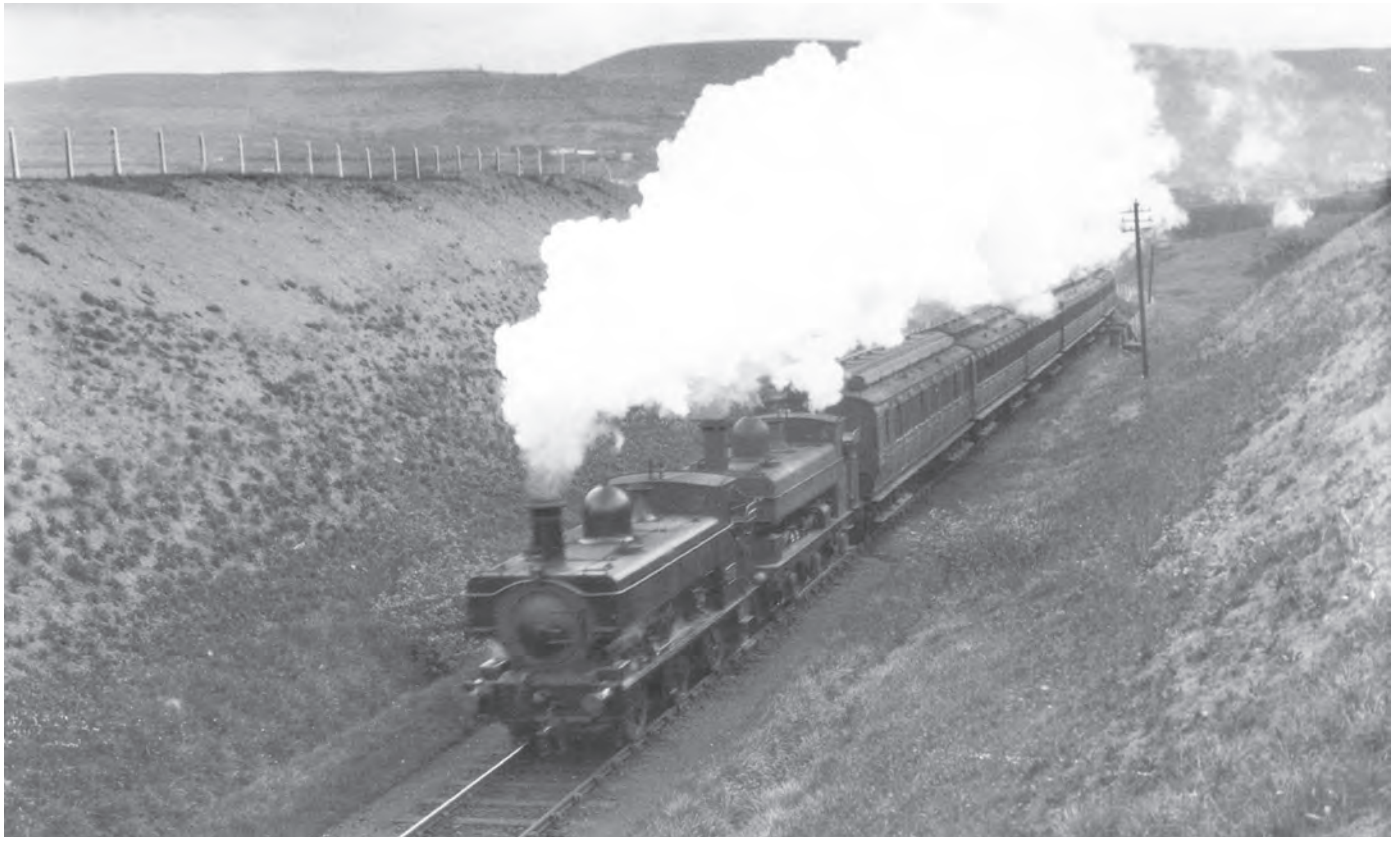

2066 double-heading 'Buffalo' 1580 on a Merthyr-Aberystwyth train near Merthyr, c1922. (LCGB/John Hodge Collection)

2113 on the 4pm Merthyr-Brecon train, leaving Merthyr, September 1922. This was the first day that GW engines operated the former Brecon & Merthyr Railway trains. (LCGB/John Hodge Collection)

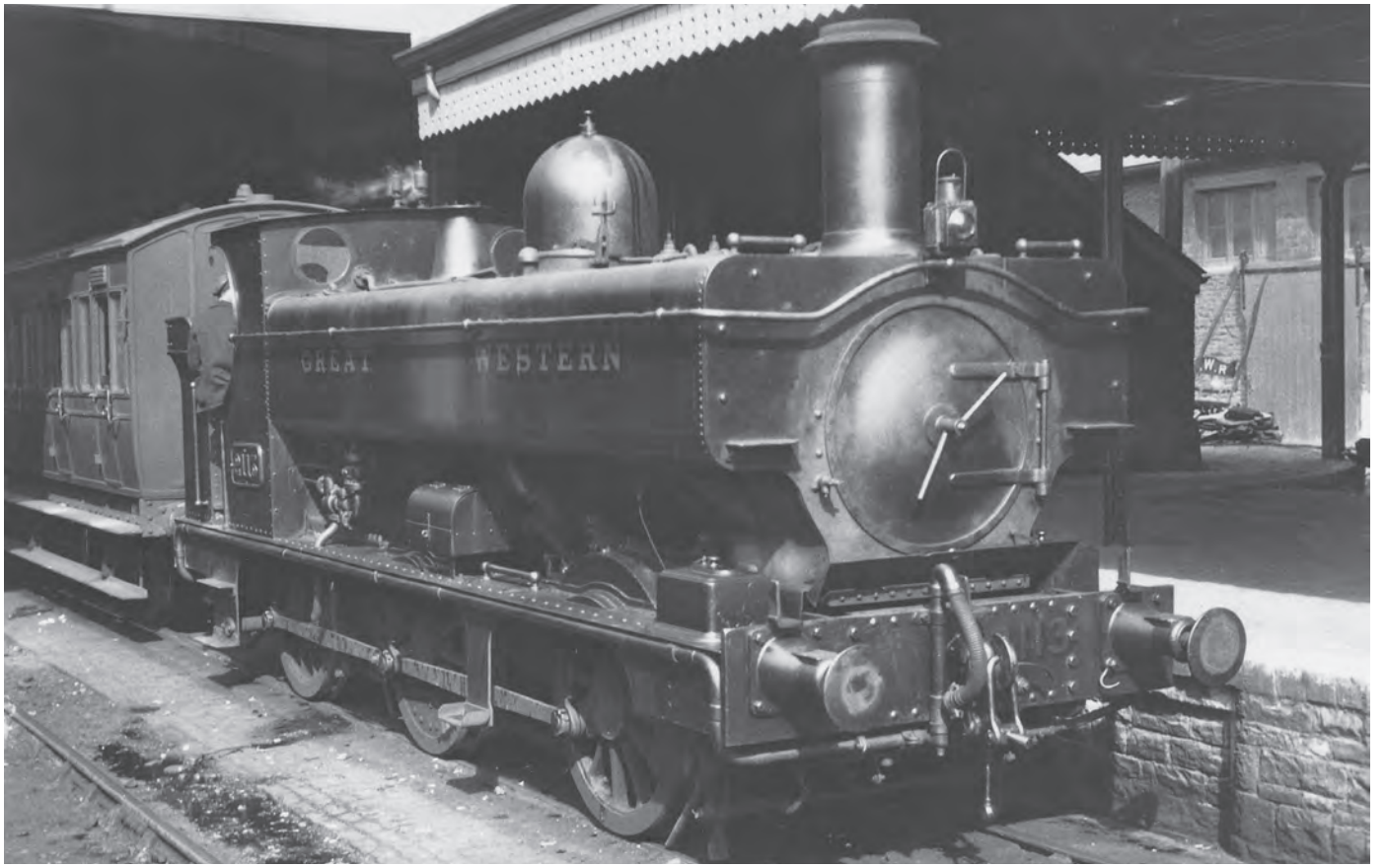

2113 on a passenger train at Merthyr station, c1923. (LCGB/John Hodge Collection)

2031, built in 1897 and rebuilt with pannier tanks in 1923 with '655' tank 2013 at Bristol St Philip's Marsh, 16 August 1936. (F.K. Davies/John Hodge Collection)

2032 at Oswestry, 16 May 1937. It was withdrawn in 1951. (F.K. Davies/John Hodge Collection)

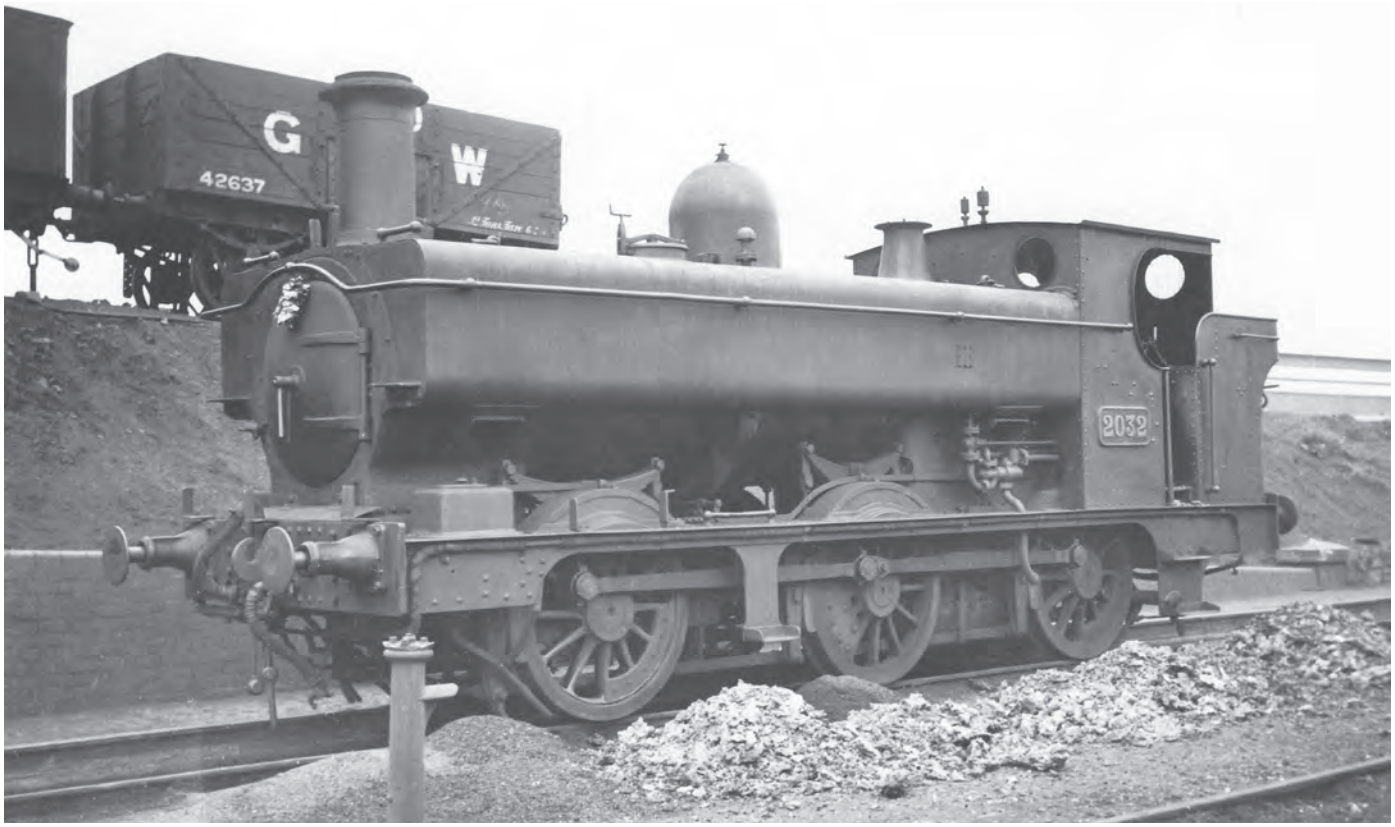

2076, built in February 1900, rebuilt with pannier tanks, enclosed cab and enlarged bunker in July 1921, and fitted with a spark arrester chimney for operation at the Ordnance depot at Didcot, c1939. It was withdrawn in October 1951. (MLS)

2097, built in July 1901, rebuilt with pannier tanks, enclosed cab and enlarged bunker, shunting at Penzance, 12 July 1938. It was not withdrawn until March 1955. (MLS)

2043, built in May 1898 and rebuilt with pannier tanks and enlarged bunker in December 1917, but retaining its open cab, running bunker first with a coal train from the Forest of Dean at Lydney Town, signalled into the yard, c1930s. (SLS/John Hodge Collection)

2055, built in 1899, rebuilt as a pannier tank in 1925, shunting at Croes Newydd, 17 September 1936. (F.K. Davies/John Hodge Collection)

2133 shunting at Westbury, 14 August 1938. (F.K. Davies/John Hodge Collection)

2055 at Watlington with an auto train, 17 June 1939. (GW Trust/ H.C. Casserley)

2098 with an auto coach and goods brakevan at Watlington station, c1938. (F.M. Butterfield/ John Hodge Collection)

2116, built in 1902 and rebuilt as a pannier tank in 1917, with a freight, c1939. (GW Trust/ P.J. Reed Collection)

Eighty-seven of the 140 locomotives received enclosed cabs at some period (again, for details, see appendix). Warning bells for those engines working over roads in dock areas were also fitted – the following engines received these for the time they were allocated to the relevant sheds: 2028/36/42/65/6 7/71/72/82/85/89/90/92/95/99, 2105/07/08/29/34/36/45. In 1939, ten engines were equipped with more powerful brakes and were renumbered 2181-2190, all bar two (2186 and 2189) being fitted at the same time with enclosed cabs. In 1930, 2080 was tested for a couple of months with 5ft 2in diameter wheels as prototype for the 54XX class, then 2062, withdrawn in August 1930, was cannibalised to become the first of Collett's 5400 class for auto-train working.

The first use of the '2021' class was in South Wales, scattered round the Principality, with other large collections at Lydney for use in the Forest of Dean. Second only to Lydney was Aberbeeg, which received five of the class new

2183 was built in December 1899 as '2021' class 2074, was rebuilt with pannier tanks in March 1913 and was rebuilt further with stronger brakes in March 1939 and renumbered 2183 as one of ten redesignated '2181' class. It was photographed at Barry, ex-works, 25.9.1954. (MLS)

2189 (formerly 2105) rebuilt with strengthened brakes in 1939 with a long freight at Severn Tunnel Junction, 10 September 1949. (GW Trust/H.C. Casserley)

2184 ,newly painted in British Railways livery, at Croes Newydd, 24 April 1949. It started life as '2021' class 2145 in May 1904 and was rebuilt with the improved brake system in June 1939. It was withdrawn in October 1950. (MLS)

2080, built in September 1900 and rebuilt with pannier tanks, enclosed cab and enlarged bunker in June 1926, was experimentally given wheels of 5ft 2in in 1930 for testing as a prototype of the 54XX class that Collett was planning for passenger auto-train working to replace the auto fitted '2021' class. It is seen here at Swindon, the enlarged wheels clear from the larger splashers required. It reverted to a standard '2021' after a couple of months when 2062 was rebuilt as the prototype 5400. (MLS/F. Moore)

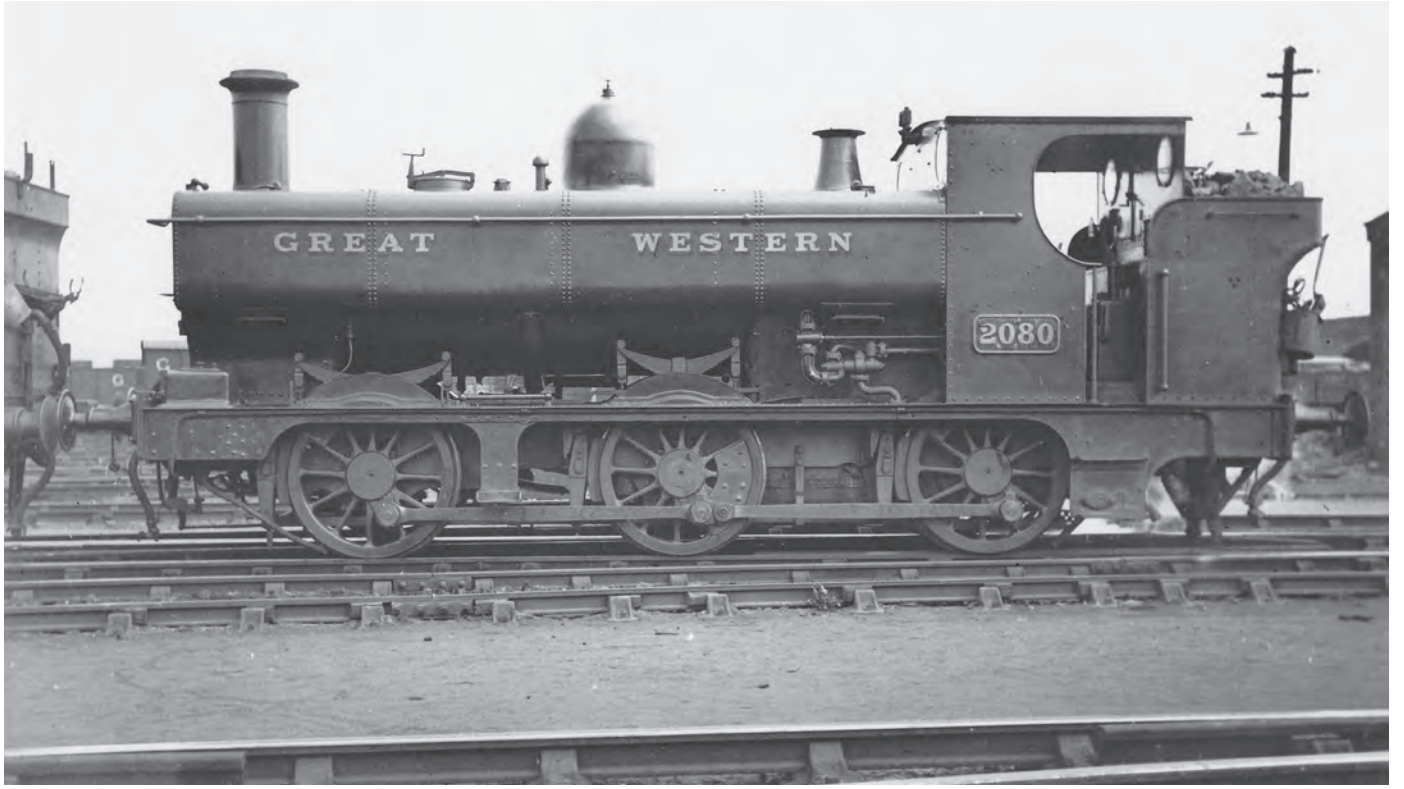

2080 restored to conventional '2021' design with 4ft 1½in diameter wheels, at Pontypool Road, 10 May 1936. (F.K. Davies/John Hodge Collection)

2089 was one of the Birkenhead based engines fitted with a warning bell for working in the dock area. It was built in March 1901, rebuilt with pannier tanks in July 1924, but retained its original small bunker and open cab. It survived until nationalisation and received BR lettering on the tank side before the 'lion and wheel' totem was introduced. However, it was withdrawn in September 1951 and replaced by others of the class for the dock shunting. It is seen on the LMR Birkenhead shed (6C) with a 63XX mogul and LMR engines in the background, c1950. (MLS/Bob Miller Collection)

and more were added between 1900 and 1910 for trip working and banking trains on the heavily graded tracks north of the junction in the Western Valley. The only other significant allocations were to Stourbridge and Pontypool, though Newport, Bristol, Old Oak Common, Southall, Tyseley and Shrewsbury had at least five each. By 1922, the Forest of Dean allocation was still the largest (eighteen), with significant numbers at Llanelli, Cardiff East Dock, Hereford and Wolverhampton, but the London District engines at Old Oak and Southall had gone. A few were in the West Country at Laira and St Blazey. Most of the class survived until after nationalisation – 120 of the 140 engines – and the sheds retaining them in significant numbers before they were withdrawn were Newport Ebbw Junction and Pill, Bristol SPM, and Croes Newydd. Because of their short wheelbase they lingered in dock areas after most were withdrawn, particularly at Llanelli and Birkenhead. Twenty-five different '2021' class finished their days on Birkenhead Docks, where some of the remaining few (2042/82/85/92/99, 2108/12/34/36) were transferred to the London Midland Region when Regional boundaries changed. When some of these were withdrawn, they were replaced by 2040/43/69/72, 2101/07/60.

As the youngest of the rebuilt saddle tanks (albeit well over forty years old) all bar twenty made it to nationalisation, though many were condemned in the 1949-51 period as the Hawksworth 94XX were delivered. The remaining ones were valuable because of their short wheelbase and stayed occupied where the Hawksworth engines were prohibited. The BR survivors were painted unlined black, most receiving smokebox door numberplates and were categorised as '2F'. All the survivors remaining in 1955 were based at Birkenhead Docks, the last to be withdrawn being 2069. All ran between 600,000 and 1,150,000 miles in traffic, the highest being 2117 at 1,153,319 miles – although the final mileage of the LMR engines is not recorded. They were great workhorses for many years, popular with their crews and it is unfortunate that the last was withdrawn before the preservation movement was really active.

2040, built in March 1898 and rebuilt as a pannier tank in 1923, acts as station pilot at Worcester Shrub Hill in the early 1950s. It was one of the last survivors moving to Birkenhead and being withdrawn in October 1956. (GW Trust)

2051, built in October 1898, and rebuilt as a pannier tank in 1923, at Kidderminster, fitted with spark arresting chimney, 12 November 1950. It was withdrawn from that depot in July 1951. (MLS)

2115, recently outshopped in BR livery, c1949. It is stabled next to a LNWR 0-8-0 at an unknown shed location, probably Shrewsbury or Chester. 2115 was built in October 1902, rebuilt with pannier tanks, enclosed cab and enlarged bunker in March 1913 and was withdrawn in June 1952. (MLS)

'1490' 4-4-0PT

In October 1898, the GWR constructed a singular 4-4-0 pannier tank intended initially to replace the 'Metro' tanks on the London suburban services, but, weighing over fifty tons with an axleload of 17 tons 12 cwt, it was too heavy for that use and additionally it was found to be too unstable at passenger train speeds. Although designed and built in the Dean era, it had an early Belpaire firebox indicating Churchward's growing influence and requiring redesign of the tanks away from the saddle variety which could not easily accommodate the raised firebox. It had two 15½in x 26in cylinders, coupled wheels of 4ft 7½in, boiler pressure of 165 lbs psi, with a total heating surface of 1,484.34sqft, and a grate area of 20.41sqft. The tank water capacity was 1,075 gallons and it had a tractive effort of 15,785 lbs.

Unsuccessful for the duties for which it was designed, it was not replicated, but relegated to freight and shunting work in the Bristol/Gloucester area at first, then later taking up the position of regular pilot/shunting engine at Bath. It was finally at Swindon before being sold in 1907 to the Ebbw Vale Steel, Iron & Coal Company, where it spent a year at Pontypool and Abercarn (named *Dickinson*) before being resold to the Brecon & Merthyr Railway in 1908 and later resold again to Cramlington Colliery Company in Northumberland. The latter company made a number of modifications intended to make it more suitable for heavy colliery traffic, but it was scrapped in 1929.

Whilst clearly not very successful – indicated by the number of owners who got rid of

Portrait of Dean's 4-4-0PT No.1490, as built, c1899. (MLS/F. Moore)

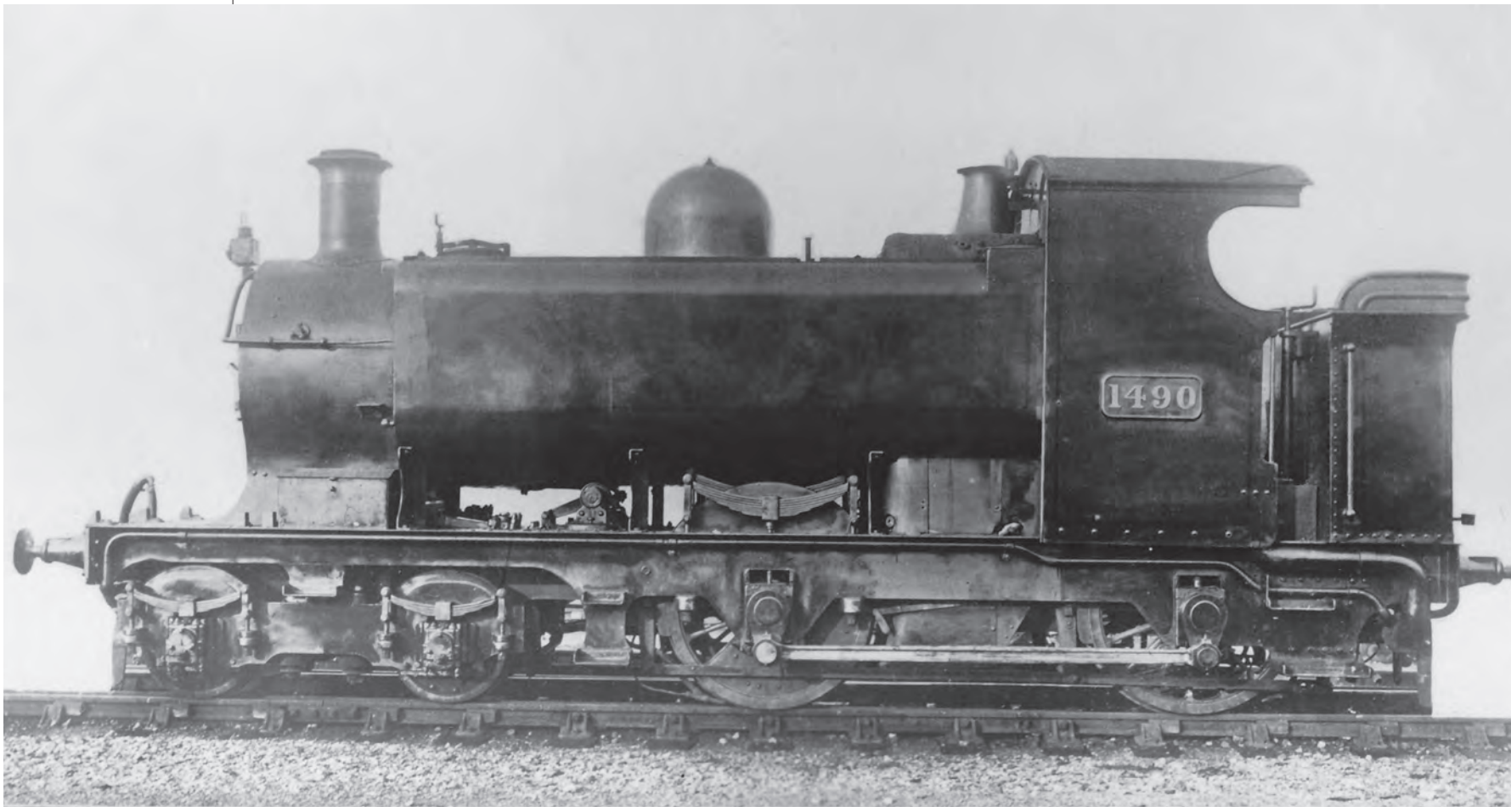

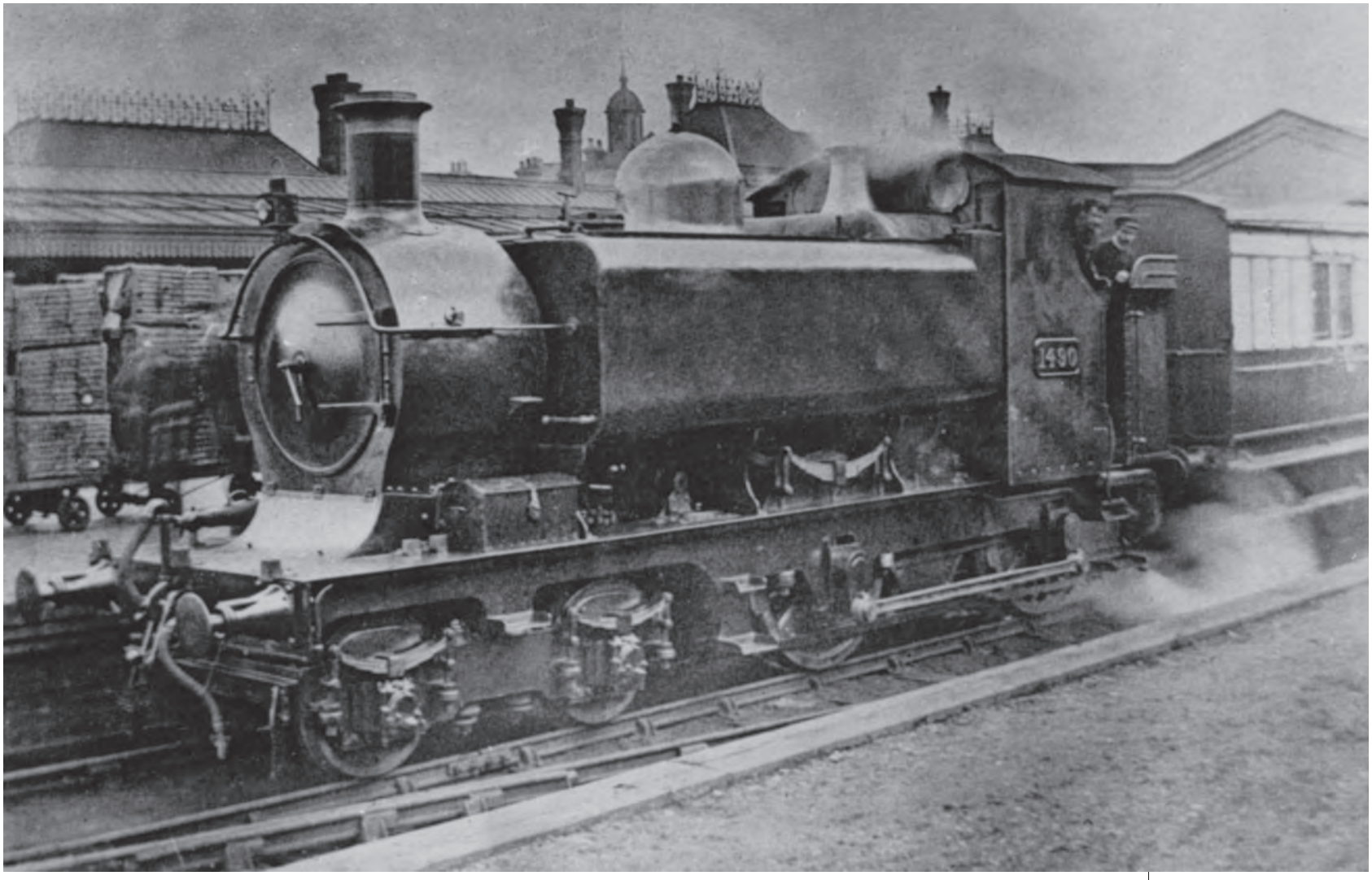

GW 4-4-0PT 1490 on Paddington suburban duties for which it was designed and found wanting, at Slough, c1900. (MLS)

it – it has the distinction of being the first GWR engine to adopt the pannier tank form, in this case starting only at the back of the smokebox, in similar fashion to Hawksworth's 94XX and 15XX in the 1940s.

0-6-4 'Crane Tanks', 1901, 1921 (Nos. 16-18)

Two 0-6-4 crane tanks, using the class '850' saddle tank as base design, were built by the GWR in April 1901. They had the same R0 boiler with raised round top fireboxes, but the domes were omitted so that the jibs of the crane could be lowered when running. No.17 was named *Cyclops* and was based at Wolverhampton Stafford Road Works and the second, No.18 *Steropes*, was located at Swindon Works (the Great Western expected its employees to have a classical education! 'Steropes' is Greek for 'lightning' – hardly the best epithet for a crane engine – and was the name of a number of Greek mythical female characters). Because of the need to lower the crane jibs, these two tank engines were among the pioneers in adopting pannier tanks on the railway. Their other key dimensions were: two 16in x 24in cylinders, coupled wheel diameter 4ft 1½in, trailing wheels 2ft 8in, boiler pressure 150 lbs psi, heating

surface 1,086.9sqft, and grate area 12.61sqft. The engine with mounted crane weighed 63 tons 12 cwt, with a maximum axleload of 14 tons over the coupled wheels. The pannier tanks' water capacity was 1,250 gallons. The crane could lift 9 tons at 12 ft reach and 6 tons at 8 ft and was intended for lifting materials around the Works, rather than breakdown duties. The steam crane took its power from the engine boiler and was operated from the swivelling turntable under the crane supported on the four-wheeled bogie of 6ft wheelbase.

A third engine of similar design and purpose was constructed in 1921, numbered 16 and named more appropriately *Hercules.* It differed from the earlier pair by having a Belpaire firebox and a higher boiler pressure (165 lbs psi), but a reduced heating surface of 980.75sqft, and grate area of 11.16sqft. The panniers held 1,200 gallons. It joined No.18 at Swindon Works and No.17 was transferred there from Wolverhampton in 1934. From May 1929 all three had been allocated to Departmental Stock. Improved lifting facilities at the Works made the three engines redundant and they were withdrawn in September 1936, although it was another year before they were scrapped.

GW crane tank 0-6-4PT No.17 *Cyclops* when brand new, built at Swindon and stationed at Wolverhampton Stafford Road Works, 1901. It was one of the first GW locomotives equipped with pannier tanks. (GW Trust)

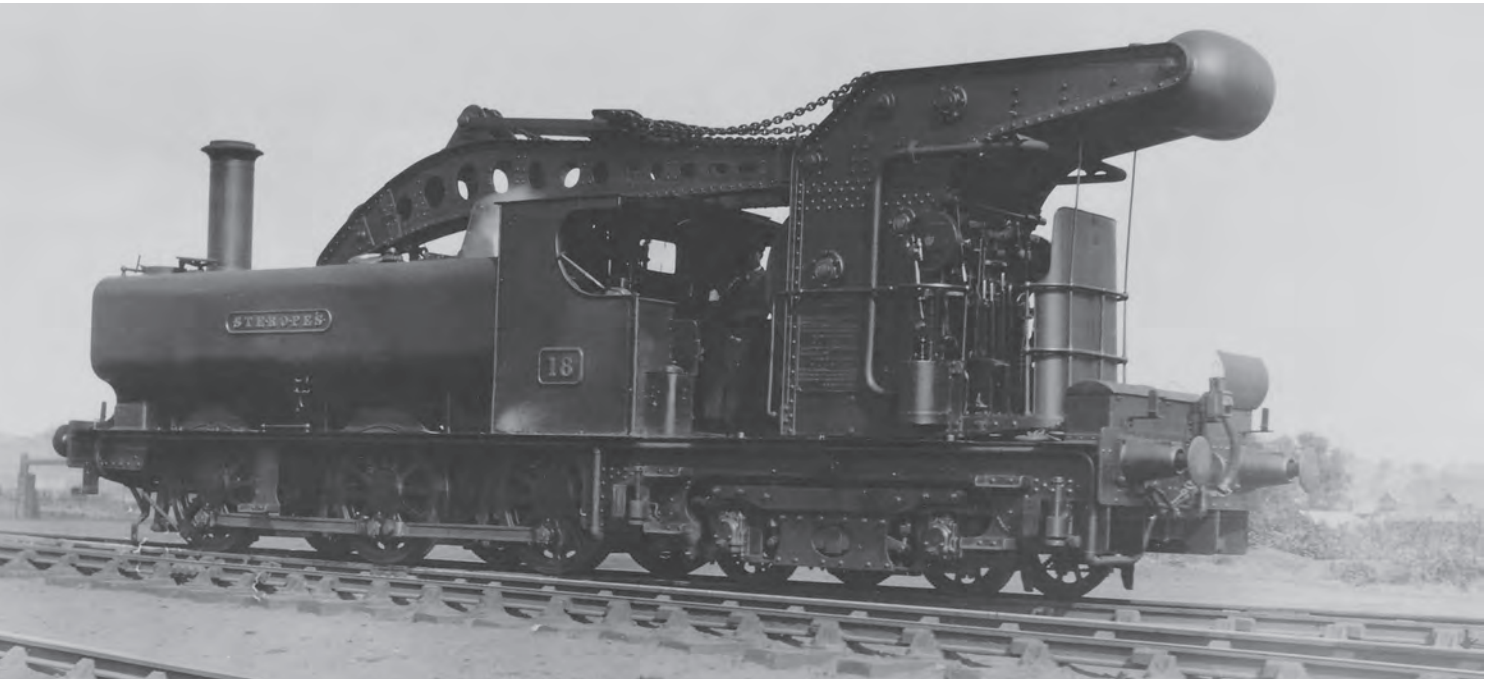

Rear view of crane tank No.18, *Steropes,* also built in 1901 and based at Swindon Works, c1920. (MLS/Bob Miller Collection)

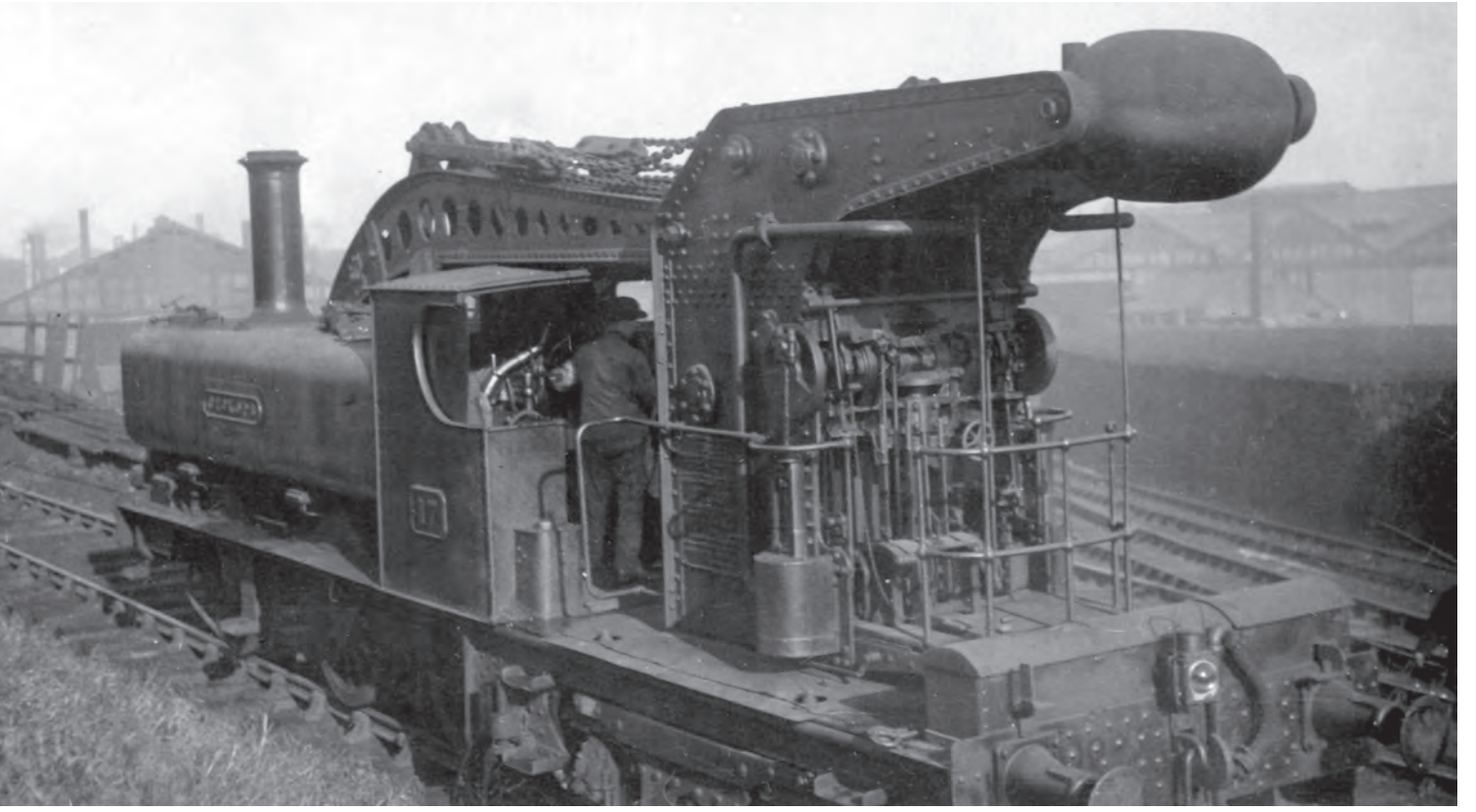

A rear view of the crane tank No.17, *Cyclops,* and the engine and crane controls, taken at Wolverhampton, c1920. (GW Trust)

Another view of crane tank No.18 *Steropes* at Swindon, c1920. (MLS/W. Leslie Good)

GW crane tank No.16 *Hercules* built in 1921 but to similar design and allocated to Swindon Works where it is seen with jib raised, c1925. (MLS/Bob Miller Collection)

Chapter 3

'ABSORBED' SADDLE & PANNIER TANKS

Barry Railway Class 'F', 1890-1905 (GW 708 – 807, with many gaps)

The Barry Railway Company ordered three 0-6-0 saddle tanks, Nos. 47 – 49, from Sharp Stewart, delivered in July and August 1890 for heavy shunting at Barry Docks. They had 18in x 26in cylinders, inside frames, 4ft 3in diameter coupled wheels, and with water capacity of 1,050 gallons and 30 cwt of coal, weighed 47 tons 8 cwt, with a maximum axleload of 16½ tons. Two further engines to the same design (64 and 65) were received from Vulcan Foundry in June and July 1892, three more from Sharp Stewart (70-72) in December 1894 and a further eight (37, 52 and 99-104) in 1900. The North British Loco Company built six in 1905 (127-132) and finally Hudswell Clarke constructed another batch of six (133-138) also in 1905. The 1905 engines had lever instead of screw reverse, more suited to shunting, otherwise differences were few – such as the addition of rails to the bunkers from 1900, with earlier locomotives having them added later.

The engines all had Barry type 2A or 2B boilers, although from 1909 new boilers of type 2C were fitted. Later, but still in Barry Railway hegemony, the cylinders were lined up to 17½in. Full dimensions recorded by the GWR at its absorption of the South Wales companies' engines in 1922, gave additional information: heating surface 1,070sqft, grate area 20.5sqft, boiler pressure 150 lbs psi (160 lbs psi for those engines fitted with the Barry 3A boiler after 1912). Wheels were then 4ft 4in as a result of thicker tyres (in common with the earlier GW saddle tanks) and weight had risen to 49 tons 6 cwt, the maximum axleload increased to 17 ½ tons. Tractive effort was 19,525 lbs for the engines with 150 lb boilers and 20,825 lbs for those with the higher pressure. The GW reduced the wheel diameter back to 4ft 3in, which increased the tractive effort by a further 2-3 per cent.

The GW renumbered the Barry engines in the 710-729 series at first and then slotted engines randomly into spare numbers – 708, 742, 747, 754, 778-780 and finally 807. Full details of the renumbering are in the appendix. The GW balanced and redistributed the weight, then in 1924 undertook a more substantial rebuilding of some of the engines, equipping them with a Swindon Standard No.9 boiler with 160 lbs psi and pannier tanks of 1,200 gallon capacity – 710/14/18/21/25 and 807 – followed by two more, 723 and 780 in 1927. Further engines were rebuilt at Swindon with the No.9 boiler between 1930 and 1932 but retained saddle tanks.

Initially, all the engines were allocated to Barry for dock shunting, although trip working from Cadoxton yard, Barry Docks and Barry Works was also encompassed. After 1922, the GW reallocated some to Cardiff East Dock, Canton and Cathays, then later also to Newport Pill, Neath and Duffryn Yard. By the early 1930s, they were being replaced by Collett's 57XX and the 67XX steam braked dock shunters, but with many having recently been rebuilt at Swindon, those not scrapped around 1932-4 were offered for sale and many went to collieries, some in South Wales, but others to the North East. The last GW allocated engine was withdrawn in 1937, although some of the engines sold to collieries lasted well into the NCB era, with a couple still in existence in 1963/4.

Barry 'F' class 0-6-0ST 726, built in 1905, at Barry, 7 August 1924. It was taken out of service still in saddle tank form in 1932 and put on the Sales List but remained unsold and was scrapped. (GW Trust /P.J. Reed Collection)

Ashington Colliery No.22, formerly Barry Railway 72 and GW 718, built in January 1895 and rebuilt with pannier tanks in March 1924, sold in January 1935, which lasted in NCB service until June 1962. (MLS/Bob Miller Collection)

Barry 'F' saddle tank, formerly No.724, built in March 1900 and sold to the Hartley Main Colliery in May 1933, where it was renumbered 24. It was retained by the NCB and was scrapped in April 1960. (GW Trust /P.J. Reed Collection)

Sharp Stewart GW 721, formerly Barry Railway 101, built in March 1900 and converted to pannier tank form in May 1924. It was sold in May 1935 to the Ocean Coal Company and is here at Treorchy Colliery sidings, still retaining its GW number, c1950. It was scrapped at the end of 1953. (MLS/Bob Miller Collection)

Barry 'F' saddle tank, formerly GW 713, built in 1900 and sold in 1936 to John Bowes & Partners for colliery work in the north east. It was renumbered Bowes 8 and was scrapped in 1946. (GW Trust/P.J. Reed Collection)

Barry 'F' saddle tank GW 717, built in 1900 and rebuilt with pannier tanks in 1930 at Caerphilly Works, sold to John Bowes & Partners in 1934, loaned to Harton Coal Company in 1943, and subsequently employed by the NCB at Springwell Colliery until December 1963, 21 June 1940. (GW Trust/P.J. Reed Collection)

Hartley Colliery, Cramlington, No. 22, formerly Barry Railway 'F' saddle tank 130, GW 729, sold in August 1932, at the colliery NCB shed, 17 April 1960. It was withdrawn from Hazelrigg Colliery in December 1963. (MLS/H.D. Bowtell)

GW pannier tank 780, formerly Barry Railway saddle tank 138, built in May 1905 and rebuilt in July 1927, at Swindon after withdrawal and on the Sales List, 23 June 1935. It was sold to Nine Mile Point Colliery, Hafodyrynys, and was the last survivor of the class, not being withdrawn from service until June 1964 – when I was stationmaster at Aberbeeg responsible for BR services to Hafodyrynys Colliery. (F.K. Davies/John Hodge Collection)

Mileages ranged considerably, with 137 (779) of 1905 recording only 257,254 miles on its premature withdrawal in 1923 whilst Barry 37 (GW 708 of 1900) amassed no fewer than 998,172 miles. Most ranged around 400-600,000 miles.

Brecon and Merthyr Railway: Sharp Stewart 0-6-0ST, 1881 (GW 2190-1)

Passenger services between Brecon and Merthyr had been worked since the 1860s by two 2-4-0 tender engines similar to early engines built for the Cambrian railways. In 1880, the railway ordered two 0-6-0 saddle tanks from Sharp Stewart to assist or replace them and they were delivered in 1881, numbered 11 and 17 in B&M stock. They had inside frames and two 17in x 24in cylinders, 4ft 7½in coupled wheels, 140 lbs psi boiler and tank capacity of only 770 gallons. They weighed 38 tons and had an axleload of just under 13 tons. Tractive effort was 14,870 lbs. New boilers were fitted in 1902 to No.17 and No.11 was renumbered 18 and received a new boiler in 1904. They worked mainly goods and branch trains at the northern end of the line, rather than on the Brecon-Newport section and in 1922 they received the GW numbers 2190 (ex 17) and 2191 (ex 11/18).

They were stored at Swindon awaiting a decision to repair in the autumn of 1922 and eventually rebuilt with 1,000 gallon pannier tanks, GW cab and bunker and returned to operations in April 1926. 2190 was fitted with a spark arresting chimney in 1930 for work at Didcot and was withdrawn in May 1934, having achieved well over a million miles in traffic. 2191 remained in South Wales and was condemned in April 1932, having run 1,107,330 miles in traffic, being finally scrapped in February 1935.

The former Brecon & Merthyr Railway No.11 built in 1881, reboilered in 1904 and renumbered 18, in saddle tank form before rebuilding with pannier tanks and numbered 2191, c1905. (MLS/Bob Miller Collection)

Brecon & Merthyr Railway saddle tank No.17 as built in 1881 at Merthyr before rebuilding as a pannier tank and renumbered 2190 by the GWR, c1905. (MLS)

No.17 (later GWR 2190) in saddle tank form on a Merthyr-Brecon train, c1905. It was rebuilt as a pannier tank in 1922. (MLS)

GW 2190, formerly B&M No.17, at Didcot, fitted with a spark-arresting chimney, 10 May 1930. (MLS/H.C. Casserley)

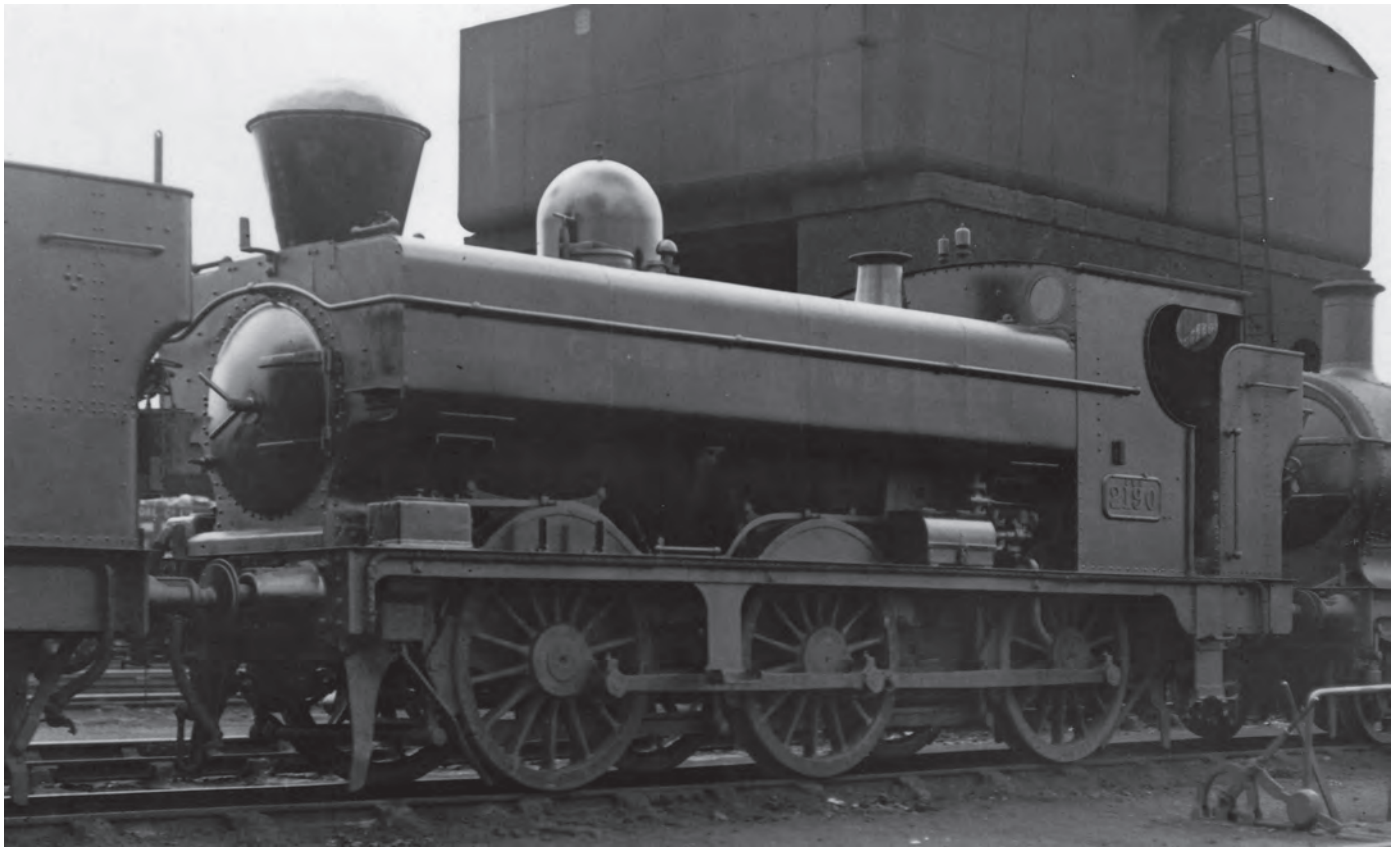

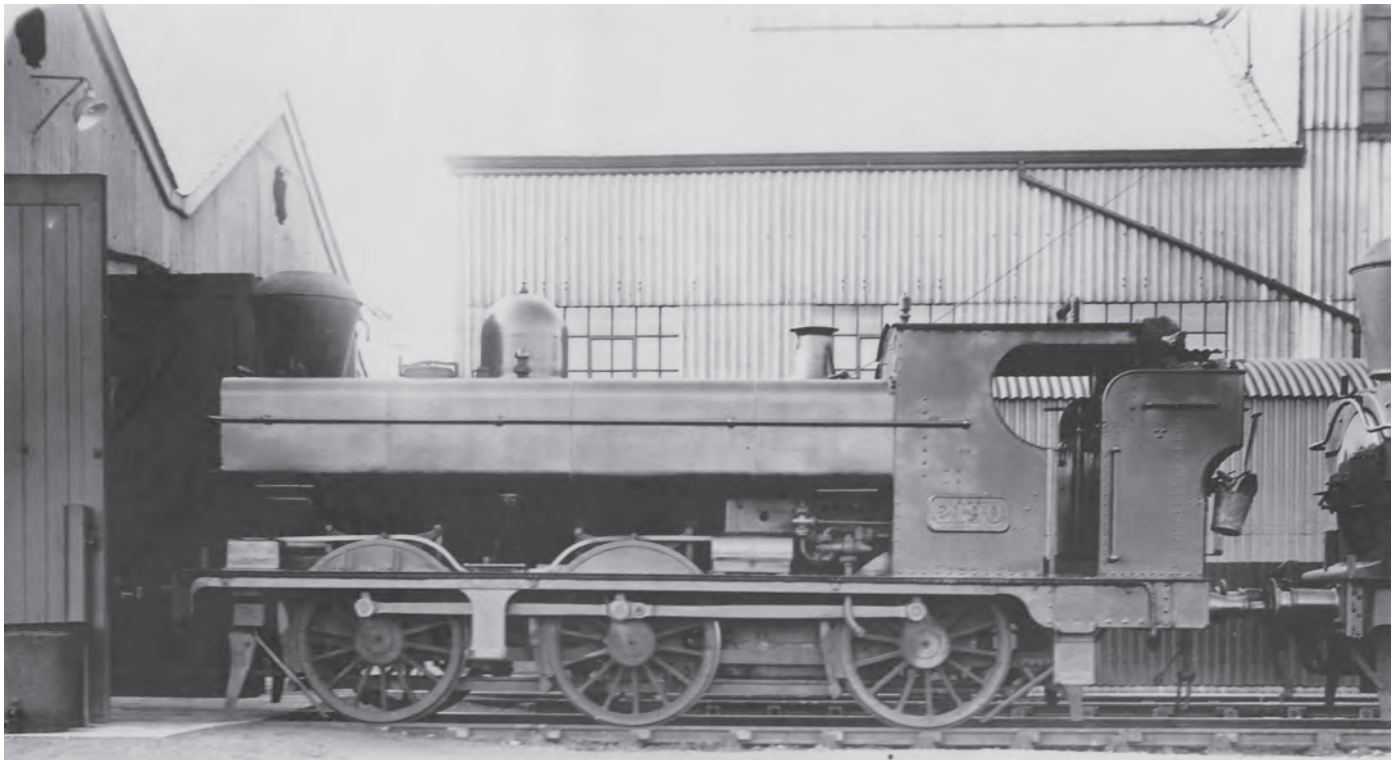

2190 with another pannier with spark arresting chimney for working at the Didcot Royal Ordnance Depot, c1932 (MLS/Bob Miller Collection)

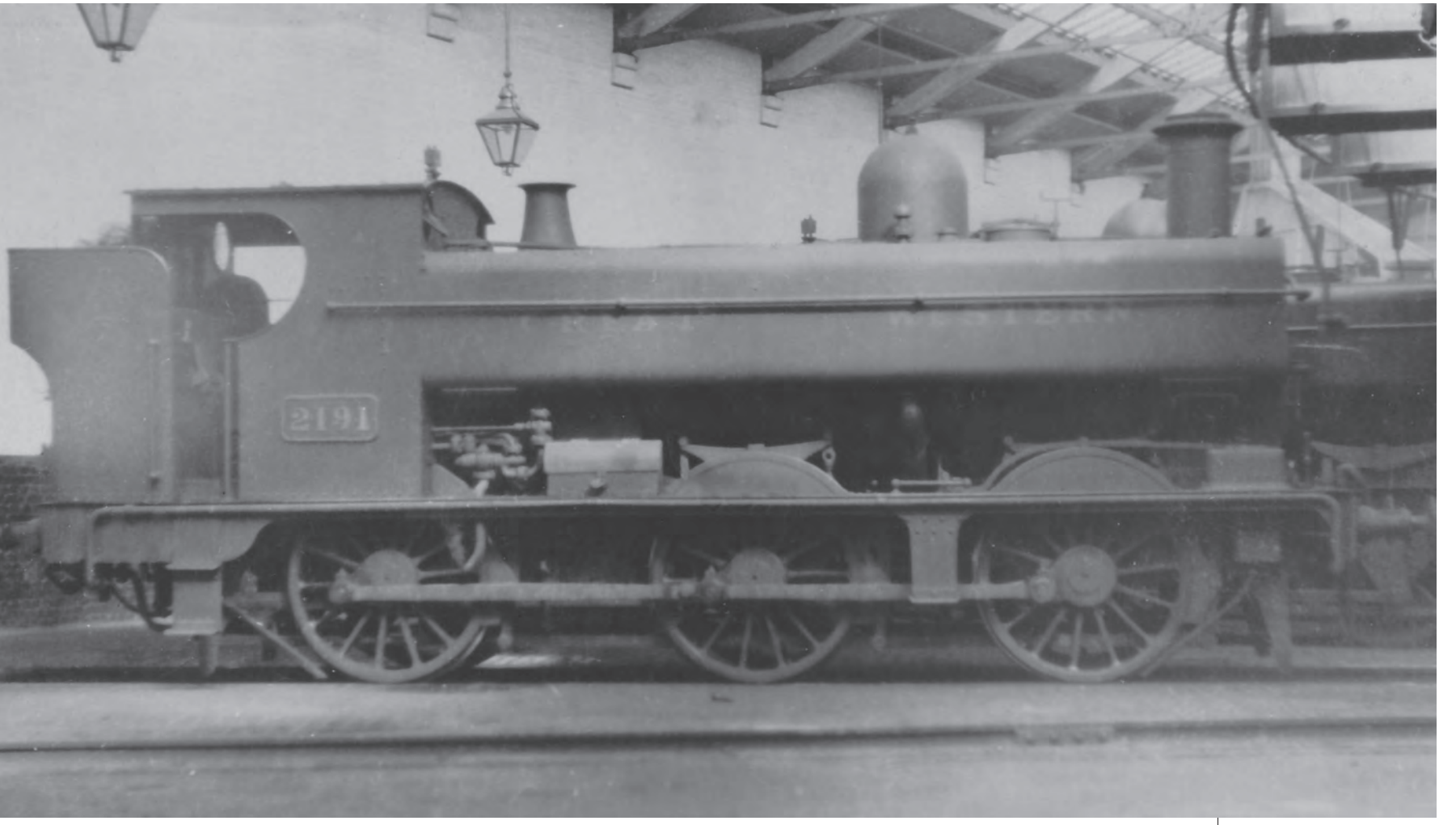

GW 2191, formerly B&M No.11, renumbered 18, at Newport, 3 March 1930, before withdrawal in April 1932. It was put on the Sales List but remained unsold, being scrapped in 1935. (MLS)

Brecon and Merthyr Railway: R. Stephenson & J.Fowler 0-6-0ST, 1884-6 (GW 2177-2186)

Two outside-framed 0-6-0 saddle tanks were ordered from Robert Stephenson & Co. at the end of 1882, to replace the old 0-6-0 tender goods engines of the 1860s, upped to an order for six, which were delivered in early 1884, followed by a further order placed after six months' experience with the engines, for a further six from John Fowler & Co. from Leeds. They were similar in design to saddle tanks purchased earlier from the Neath & Brecon Railway. Cylinders were 17in x 24in, wheel diameter was just 4ft 2½in as they were intended for freight activity. The total heating surface was 1,089sqft, the grate area 15sqft, boiler pressure 140 lbs psi and they weighed 45 tons, with a maximum axleload of 15 tons. The tanks held 900 gallons and tractive effort was 16,510 lbs.

After experimental fitting with a brake system designed by a Mr Eames, it was replaced by steam brakes, though by 1920 most had been vacuum fitted for passenger work. The first six engines were numbered 5-8, 15 and 16, though not in the order in which they were built and the second six became 1-4, 13 and 14. Boilers were replaced between 1896 and 1911 with ones similar to those provided on the 1896 Kitson and Nasmyth Wilson engines (see next class description). B & M livery was a brick red with polished brass fittings, but by 1921 most were black.

Brecon & Merthy No.3 (later GW 2179) with the 7.50am from Rhymney at Newport, 31 July 1905. (LCGB/John Hodge Collection)

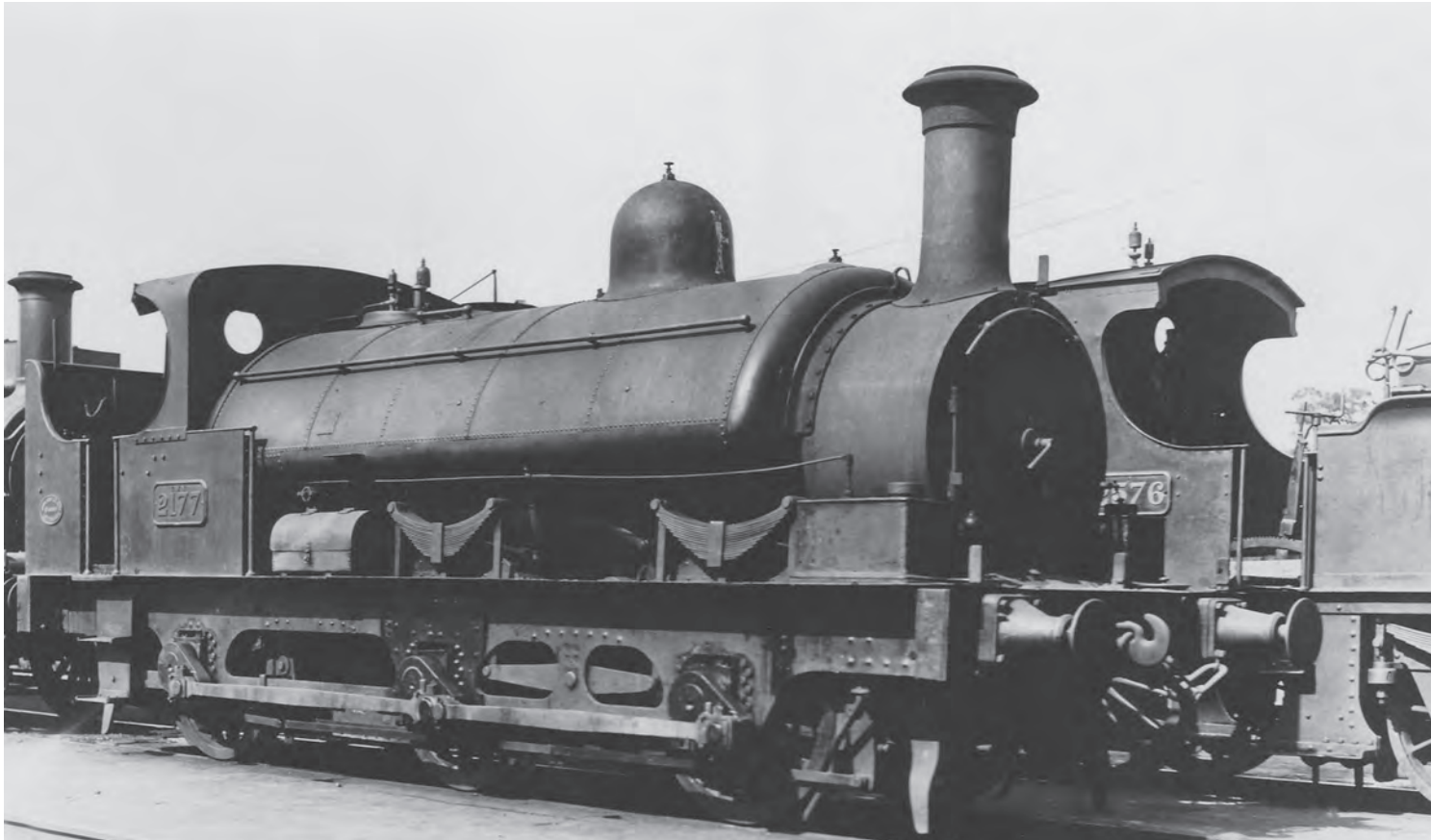

B&M Railway saddle tank No.1, built by John Fowler & Co. in August 1885, renumbered 2177 by the GWR, and withdrawn in February 1928 and cut up at Swindon. (MLS)

Brecon & Merthyr Railway saddle tank No.1 (later renumbered 2177 by the GWR) on a freight on the B&M system, c1920. (MLS)

Former B&M No.3, saddle tank GW 2179, on a goods near Merthyr at around the time of the company's engines' absorption by the GWR, c1922. (MLS)

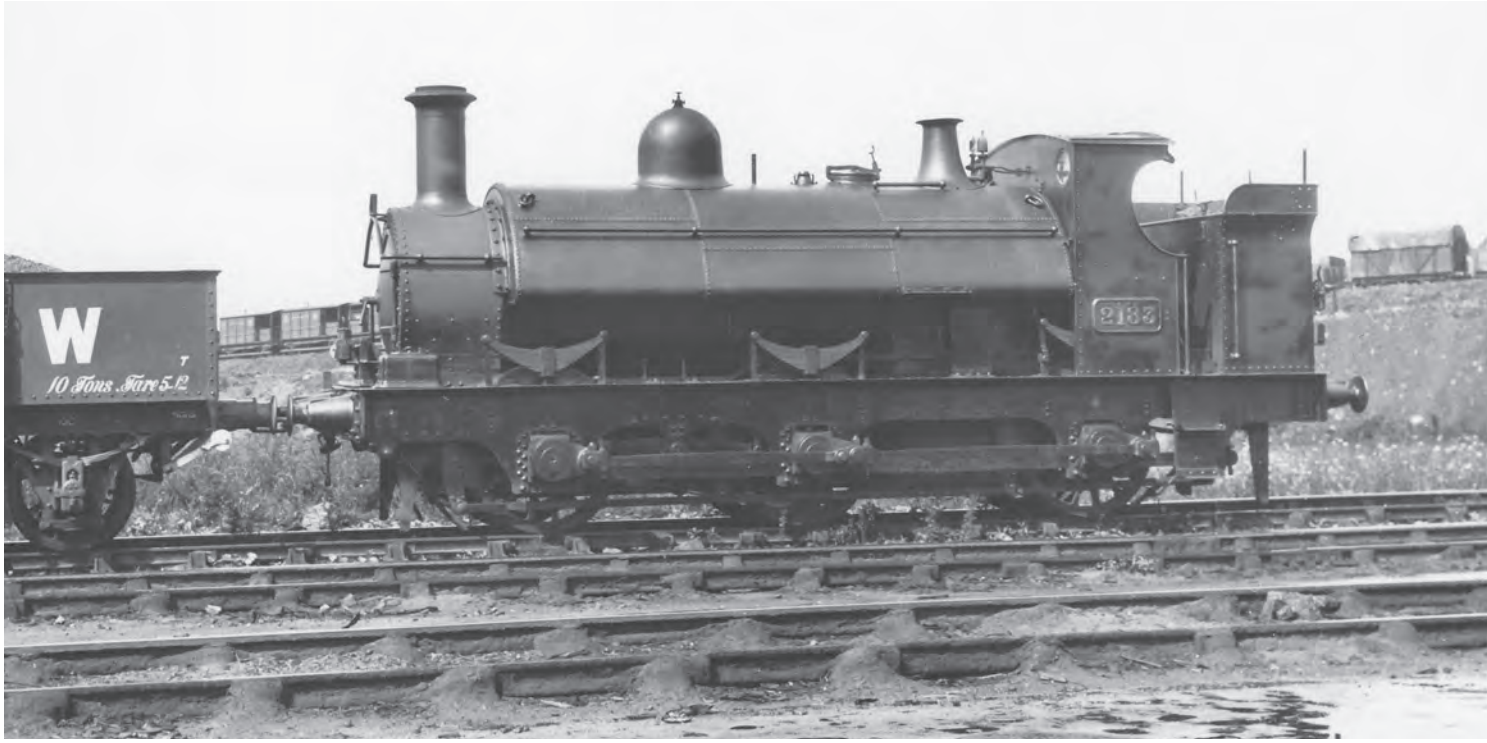

Ebbw Junction's 2183, built 1884 as B&M No.7, and rebuilt with GW cab and bunker but retaining saddle tank, at Newport Alexandra Dock Junction, c1930. It was withdrawn in 1932. (MLS)

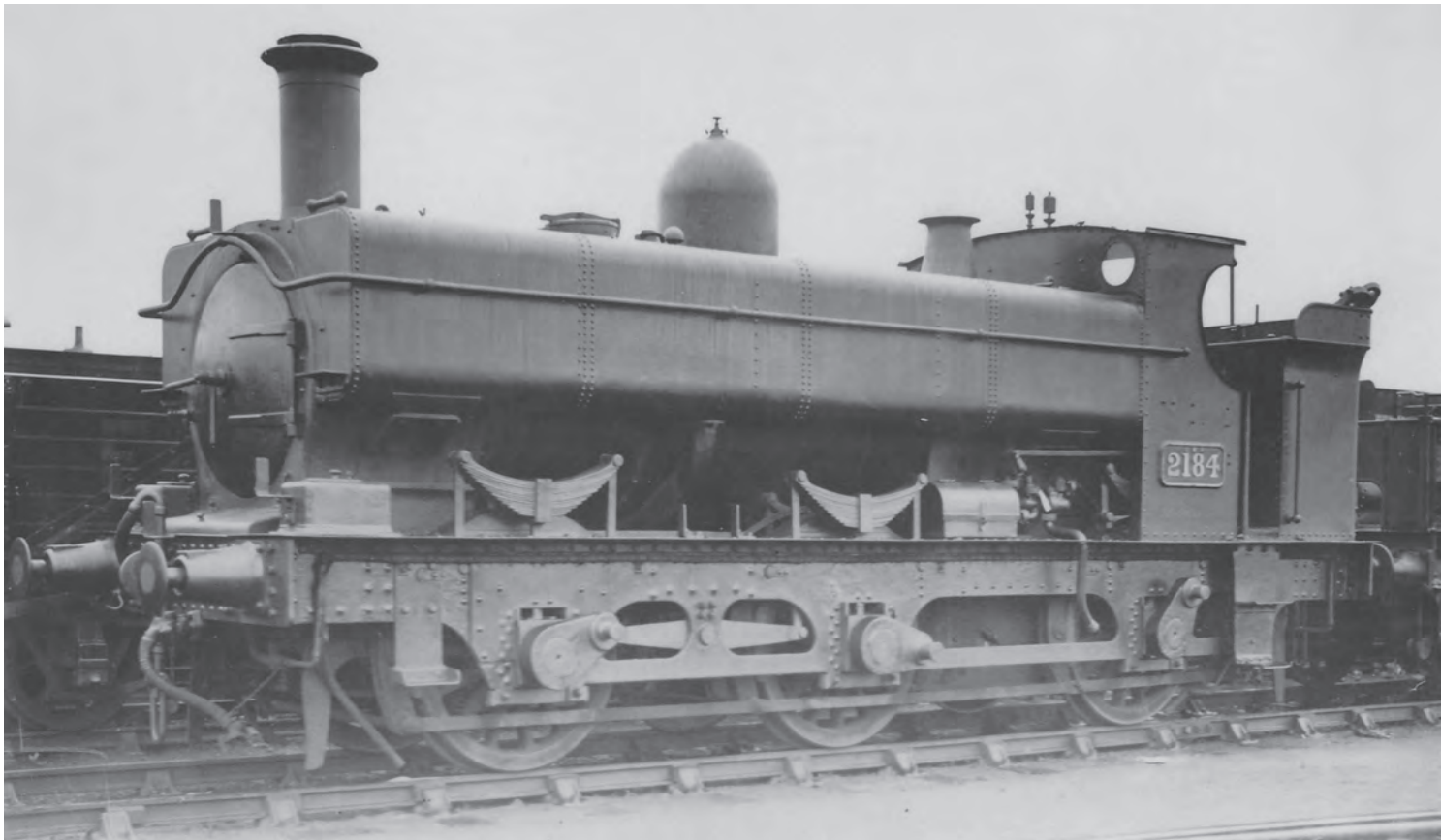

The 'Swindonised' double-framed saddle tank, 2184, formerly Brecon & Merthyr No.8, built in March 1884 by Robert Stephenson & Co., after rebuilding between 1922 and 1924 with pannier tanks, GW cab and bunker. It was withdrawn in July 1933. (MLS)

Although intended primarily for goods work, they did perform some passenger duties between Merthyr and Brecon with five at Bassaleg, six at Brecon and one at Talyllyn. In 1922, the railway was absorbed by the GWR and these engines were renumbered 2177-2186. 2184 was 'Swindonised' and provided with pannier tanks holding 1,000 gallons, GW cab and bunker in 1924, the new boiler being pressed at 165 lbs psi. Although the rest of the class were repaired and received some GW standard fittings, only 2184 was completely rebuilt. 2186 retained its lower pressure boiler but was equipped with pannier tanks, GW cab and bunker in 1926 and when the class was withdrawn between 1923 and 1933, and placed on the Sales List, only this engine was sold, finishing up with a coal company in Newcastle-on-Tyne, being scrapped in 1944. The rest, apart from 2184, retained saddle tanks to their withdrawal.

Brecon and Merthyr Railway: Kitson & Nasmyth Wilson 0-6-0ST, 1896-1900 (GW 2169-2173)

Five 0-6-0 double-framed saddle tanks were ordered, two from Kitson & Co. in 1896 and subsequently three from Nasmyth, Wilson & Co. These were intended for freight traffic with 4ft 7½in wheels, two 17in x 24in cylinders, 160 lbs psi boiler pressure and weighed 49 tons 3 cwt with a

Nasmyth, Wilson & Co saddle tank B&M No.29, built in 1900, at Merthyr, c1920. It was reboilered and rebuilt as a pannier tank in 1924, renumbered 2173 and was withdrawn in 1932. (MLS)

Kitson double-framed 0-6-0PT 2169, built as a saddle tank in 1886 as B&M No.22, and converted to pannier tank in 1924, with open cab and small bunker, withdrawn from Bassaleg in October 1927, c1926. MLS/Bob Miller Collection

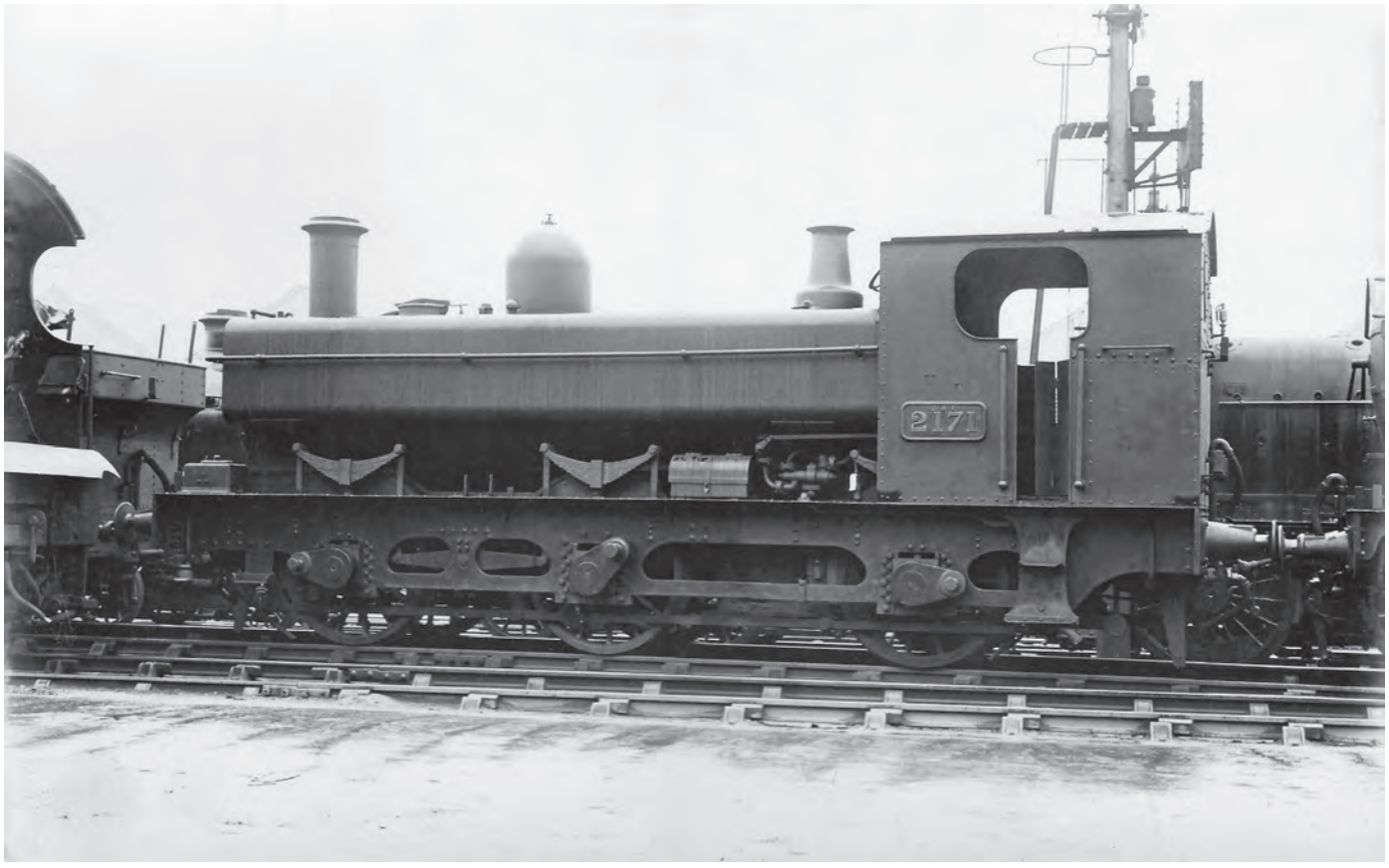

Ex B&M No.27, GW 2171, built in 1896, converted to a pannier tank with enclosed cab and bunker, at Swindon Dump, 1932. (MLS/Bob Miller Collection)

maximum axleload of 16½ tons. The had a total heating surface of 1,111sqft and a grate area of 15.25sqft. The saddle tank capacity was 1,100 gallons and the bunker held 1¾ tons of coal. The tractive effort at 85 per cent was 16,990 lbs. The engines were numbered 22, 24 and 27-29 and the Kitson engines were delivered in October 1896, the other three in the autumn of 1900.

They were renumbered 2169-2173 by the GWR in 1922. Three, whose boilers were in poor condition (2169, 2172 and 2173) received '2301' Dean Goods boilers with Belpaire firebox, new cylinders and pannier tanks with 1,200 gallon capacity and re-entered traffic in 1924. No.2171 received 2173's repaired boiler, enclosed cab and bunker, and also new cylinders and pannier tanks as late as 1926. They worked freight trains in the Newport and Cardiff Valleys until their withdrawal, starting with 2169 in 1927 and finishing with 2171 and 2173 in 1932. 2171 was put on the Sales List, but no offers were received and it was scrapped in 1935.

Brecon and Merthyr Railway: GW '1661' class

The Company purchased three GW '1661' class outside-framed saddle tanks in 1906-7, numbers 1685, 1693 and 1694, which they renumbered 32-34. These three engines had been built in 1886 and reboilered in 1904. The technical details and dimensions can be found in the earlier chapter on the '1661' class. They returned to the GW in 1922, regained their former numbers and worked mainly on the Rhymney branch, based at Bassaleg. They

GW saddle tank 1693 of the '1661' class, built in March 1887, and sold to the Brecon & Merthyr Railway in February 1907 where it was renumbered 33, seen here ready for transfer to the B&M, 1907. (GW Trust/P.J. Reed Collection)

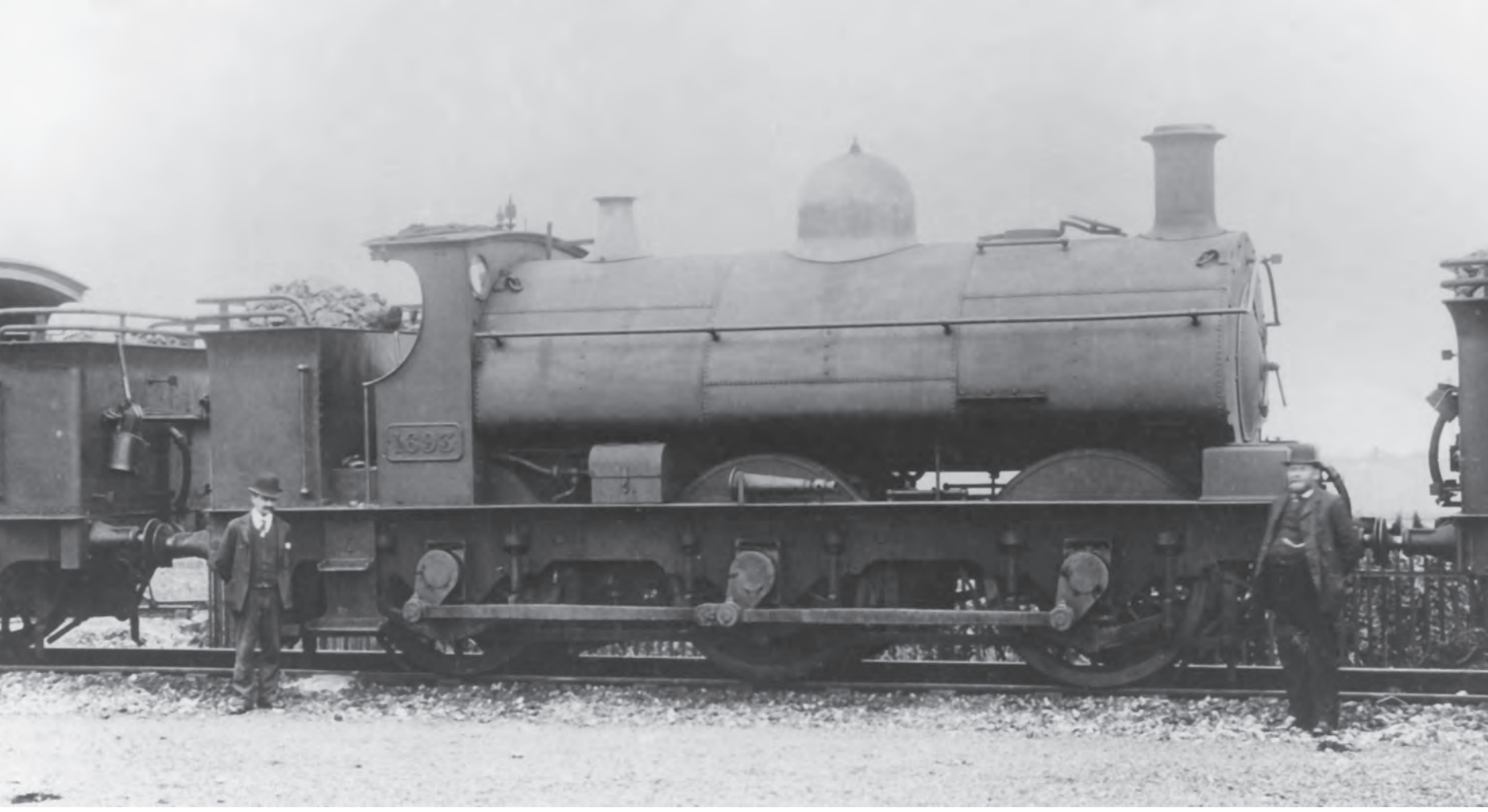

were rebuilt as pannier tanks in the same fashion as the rest of the class and were withdrawn in 1926 (1694), 1931 (1693) and 1934 (1685).

Brecon and Merthyr Railway: No.35 4-4-0PT (GW 1490)

A further engine purchased by the B&M Railway Company was the unique GW 4-4-0 pannier tank, 1490, which they acquired via the Ebbw Vale Steel Co. in 1908 and renumbered 35. A technical description and photographs were provided in the earlier chapter on early GW pannier tanks. It had been built at Swindon in 1898. The Company used it on passenger services in the Rhymney Valley. It was sold to Cramlington Colliery in Northumberland in 1916 and scrapped in 1929. (For photographs, see pages 110 and 111.)

Cardiff Railways: Kitson 0-6-0PT, 1882-1889 (GW 691-693)

Parfitt and Jenkins built fourteen 0-6-0 saddle tanks for the Cardiff Railway between 1869 and 1881 for shunting on the docks. These were followed by three pannier tanks built by Kitson, the first No.2, constructed in February 1882. It had two 17in x 26in cylinders and 4ft 2½in diameter wheels, and with 900 gallons of water on board, weighed just 40 tons. It had a very short wheelbase (just 10ft 9in) but 26ft 3in overall length. It was renumbered 693 by the GWR and withdrawn in February 1925. The other two, numbers 30 and 29, were built in March and April 1889 and constructed with hybrid pannier/side tanks (the pannier tank extended to the running plate at the rear). These were more powerful, with boiler pressure of 160 lbs psi instead of 140 and wheel diameter of 4ft 6in. However, they had no bunker and could only hold a maximum of 23 cwt of coal in the cab and on the tank top. They were numbered 691 and 692 by the GWR, both withdrawn in March 1929, but sold for shunting at Ebbw Vale Steel & Coal Company, 691 being renumbered 40 and named *Cwmcarn* and was scrapped in 1946. 692 was numbered 38 *Irthlingborough* and was posted to RTB Scunthorpe, surviving until January 1957.

One of the Parfitt & Jenkins 0-6-0STs which preceded the pannier tanks, GW 695, shunting on Cardiff Docks, c1925. It was withdrawn in October 1926. (GW Trust/ P.J. Reed Collection)

Cardiff Railways No.30 (GW number 691), built in March 1889, with hybrid pannier/side tanks, at Cardiff Docks, c1920. Note the absence of bunker and the coal stacked on the tank top in front of the cab. It was withdrawn in 1929. (MLS/Bob Miller Collection)

Cardiff Railways No.30, as GW 691, seen from the other side. (GW Trust/ P.J. Reed Collection)

Cardiff Railways: Hudswell Clarke 0-6-0ST, 1920 (GW 681-684)

Four inside-framed 0-6-0 saddle tanks were built in 1920 by Hudswell Clarke & Co. for the Cardiff Railway and were numbered 14, 16, 17 and 32. They had small diameter 4ft 1½in wheels, 18in x 24in cylinders, and a boiler pressed at 175 lbs psi. Total heating surface was 1,079.7sqft, grate area was 17.36sqft and the full-length saddle tank capacity was 1,250 gallons, the bunker holding 2 tons of coal. They were powerful shunting engines, weighing 49 tons, 17 tons 4 cwt axleload, with tractive effort of 23,365 lbs.

They were rebuilt with pannier tanks and a standard Swindon boiler between 1926 and 1939, and renumbered GW 681-684. Revised dimensions included a reduction in boiler pressure to 165 lbs psi and grate area to 16.76sqft. Weight was reduced to 45 tons 6 cwt and the axleload was significantly lowered to 16½ tons. The pannier tank capacity was 1,170 gallons and the revised tractive effort was 22,030 lbs. They were useful dock shunting engines and spent their lives at Cardiff East Dock shed. Although primarily restricted to the docks and built comparatively recently compared to the other saddle tanks inherited by the GW, they achieved more than half a million miles in traffic and all were taken into BR ownership and were not withdrawn until the mid-1950s, the last survivor being 681 condemned in February 1955. Before final withdrawal, they performed shunting duties at Swindon Works.

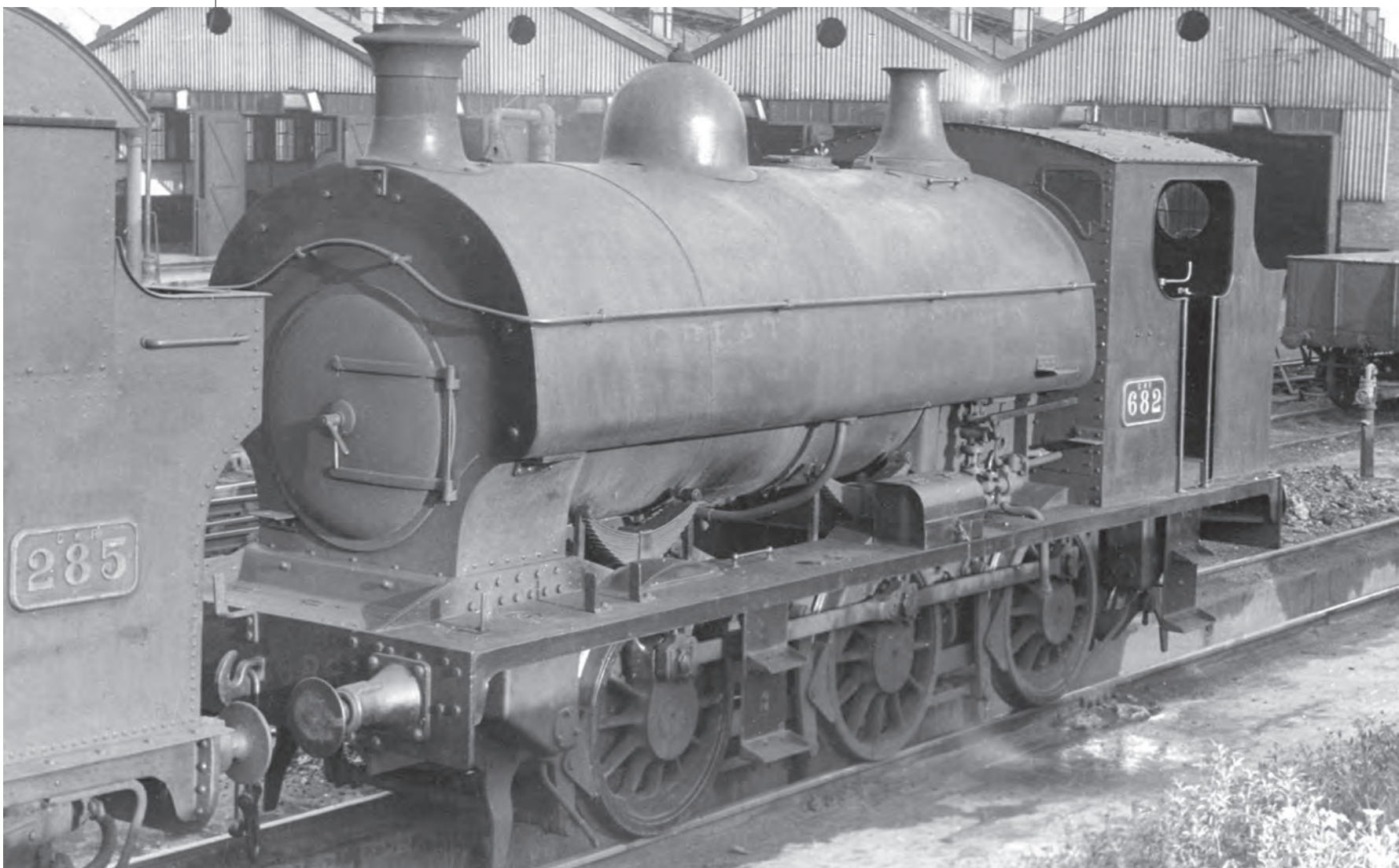

No.682 (ex Cardiff Railways No.16) in original condition as a saddle tank, built in 1920, seen here c1935. It was rebuilt as a pannier tank in October 1939. (GW Trust/P.J. Reed Collection)

681, built in 1920 as Cardiff Railways 14, rebuilt as a pannier tank in February 1930, c1946. (MLS/W. Potter)

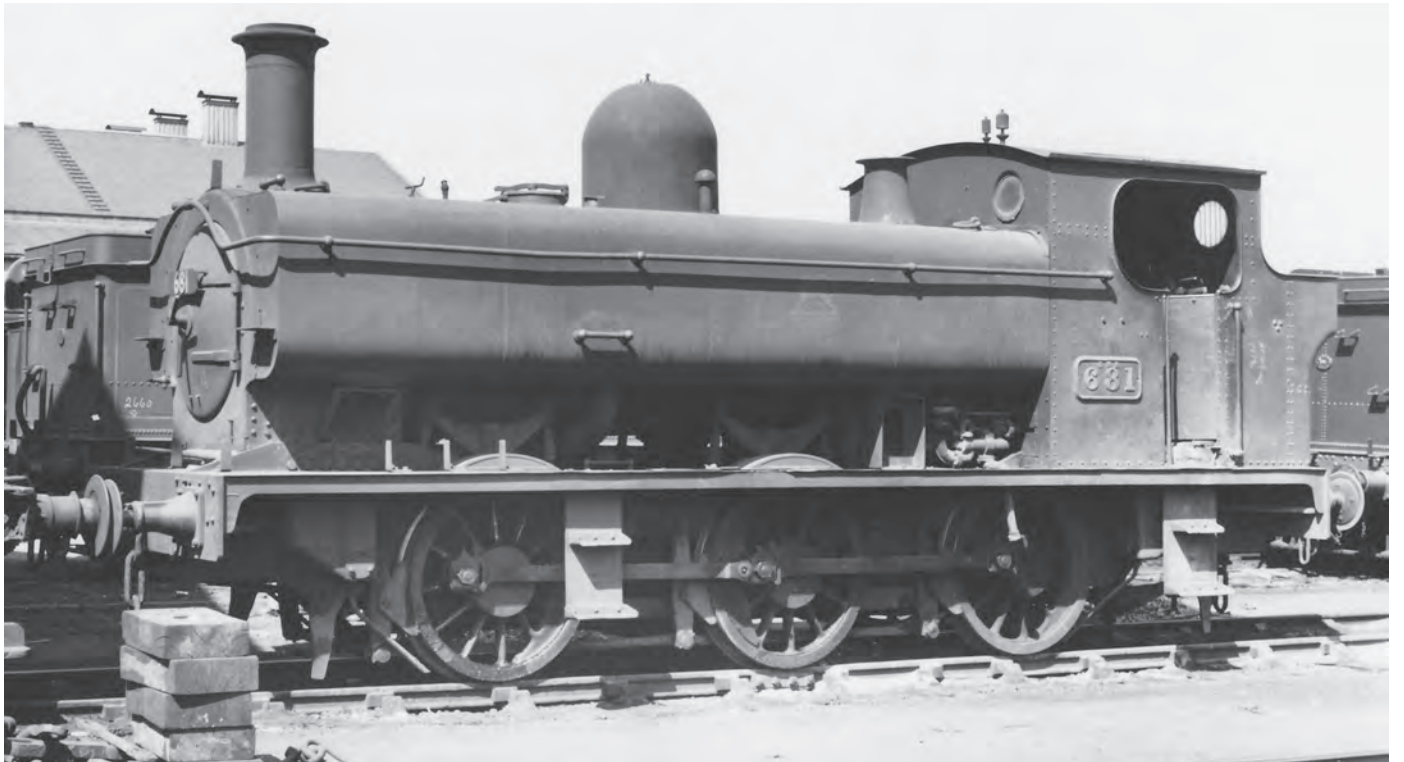

681 at Cardiff East Dock, May 1951. (MLS/Bob Miller Collection)

683 ex Cardiff Railways No.17, rebuilt with pannier tanks in 1926, withdrawn in December 1954, standing with a condemned Taff Vale 0-6-2T awaiting scrapping at Swindon, 8 May 1955. (MLS)

Cleobury Mortimer & Ditton Priors: Manning Wardle 0-6-0ST, 1908 (GW 28 & 29)

Two Manning Wardle saddle tanks were built for the light railway which was opened in 1908 primarily to access the granite quarries at Abdon Clee, although a passenger service was inaugurated in 1909. They were named *Burwarton* and *Cleobury* and had small diameter 3ft 6in wheels, two outside cylinders of 16in x 22in, and boiler pressure of 160 lbs psi. Heating surface was 918.25sqft and the great area was 14.6sqft. The small saddle tank contained just 890 gallons and the bunker was similarly limited in size. Each engine weighed just over 38 tons with 13 ton 6 cwt axleload.

They were absorbed by the GWR in 1922, numbered 28 and 29, and in 1924 No.29 (formerly *Burwarton*) was completely rebuilt with domed boiler, Belpaire firebox, enclosed cab and pannier tanks (with 850 gallon capacity). The weight was increased slightly to 39 tons 18 cwt and axleload to 14½ tons. In 1931, No.28 was rebuilt in the same way. Both lost their names when the pannier tanks replaced the saddle tank. 29 was fitted with a spark arresting chimney in 1939 and 28 also had a similar chimney after 1944 for a few years. In GW days, both were allocated to Kidderminster's sub-shed, Cleobury Town. The passenger service on which they were used ceased in 1938, and 29 spent some time subsequently at Worcester, Gloucester and Hereford. It finished its days back at Kidderminster, whilst 28 was loaned to Hafod Colliery at Wrexham in 1951, and then worked as a shunting engine at Newport Dock Street in 1952. 28 was withdrawn in 1953 and 29 three months later in early 1954.

***Cleobury*, a** Manning Wardle 0-6-0 saddle tank of 1908, rebuilt later as a pannier tank in 1931, here c1912. (MLS)

***Cleobury* in** original form with brakevan, 4 July 1921. (GW Trust/P.J. Reed Collection(

***Cleobury* working** a passenger train at Cleobury Mortimer, c1912. (GW Trust/P.J. Reed Collection)

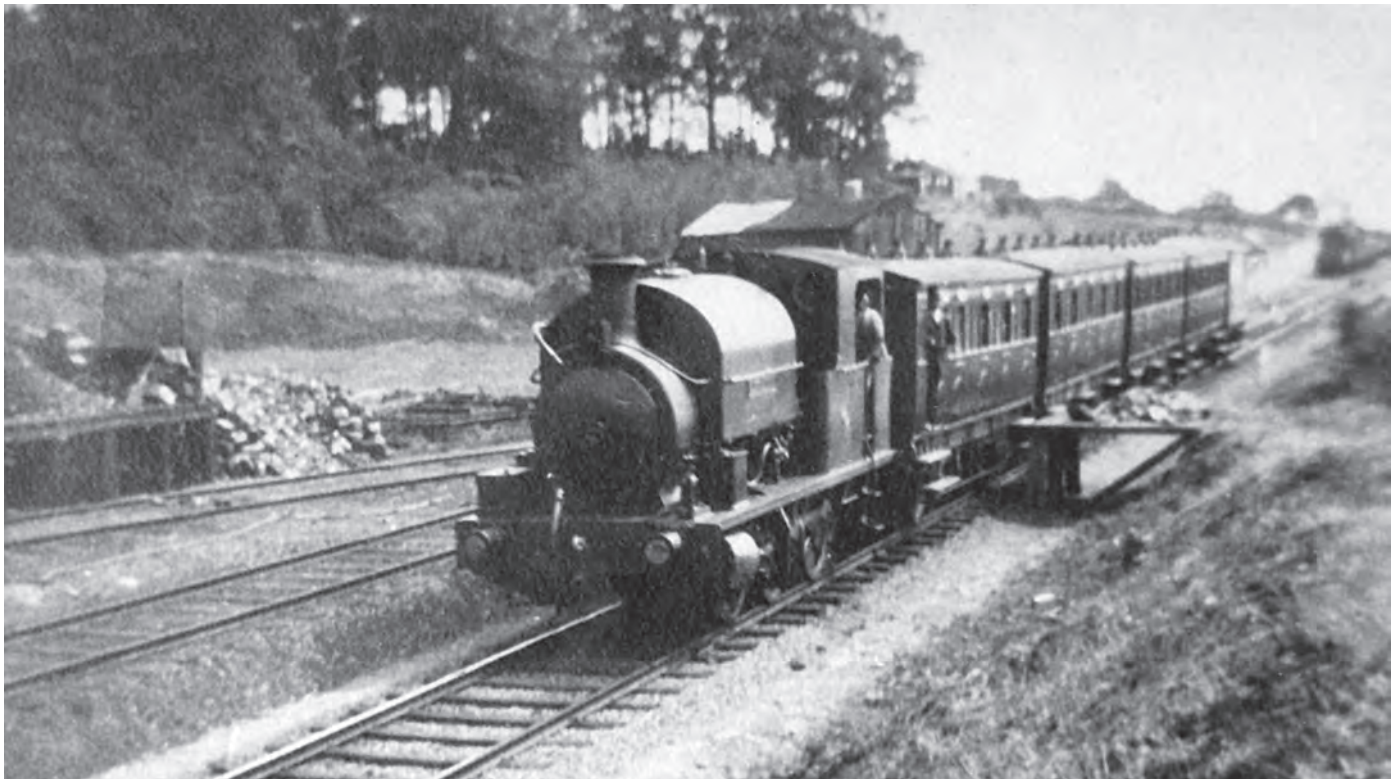

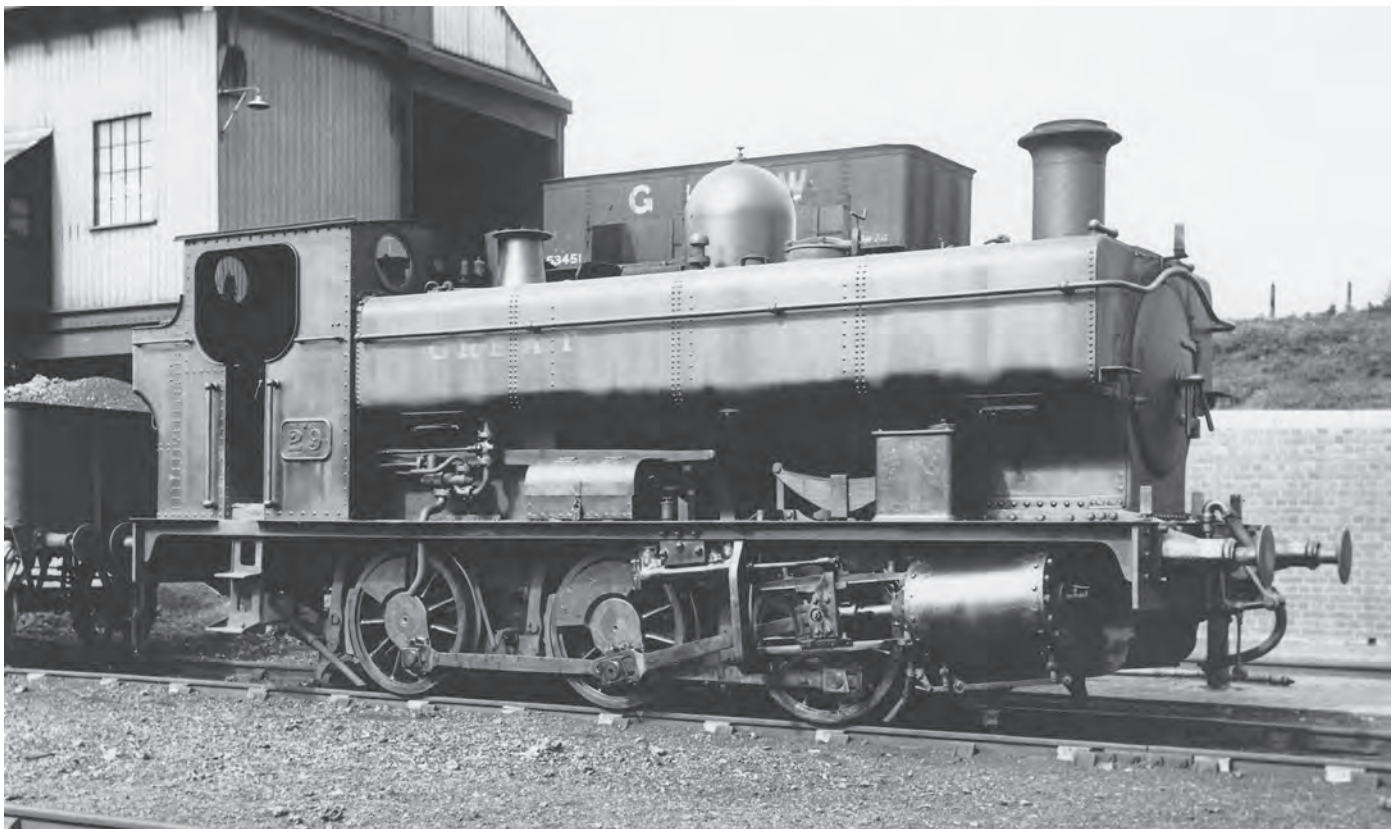

GW 29, former Cleobury & Mortimer *Burwarton* at Kidderminster, 13 September 1936. (R.K. Davies/John Hodge Collection)

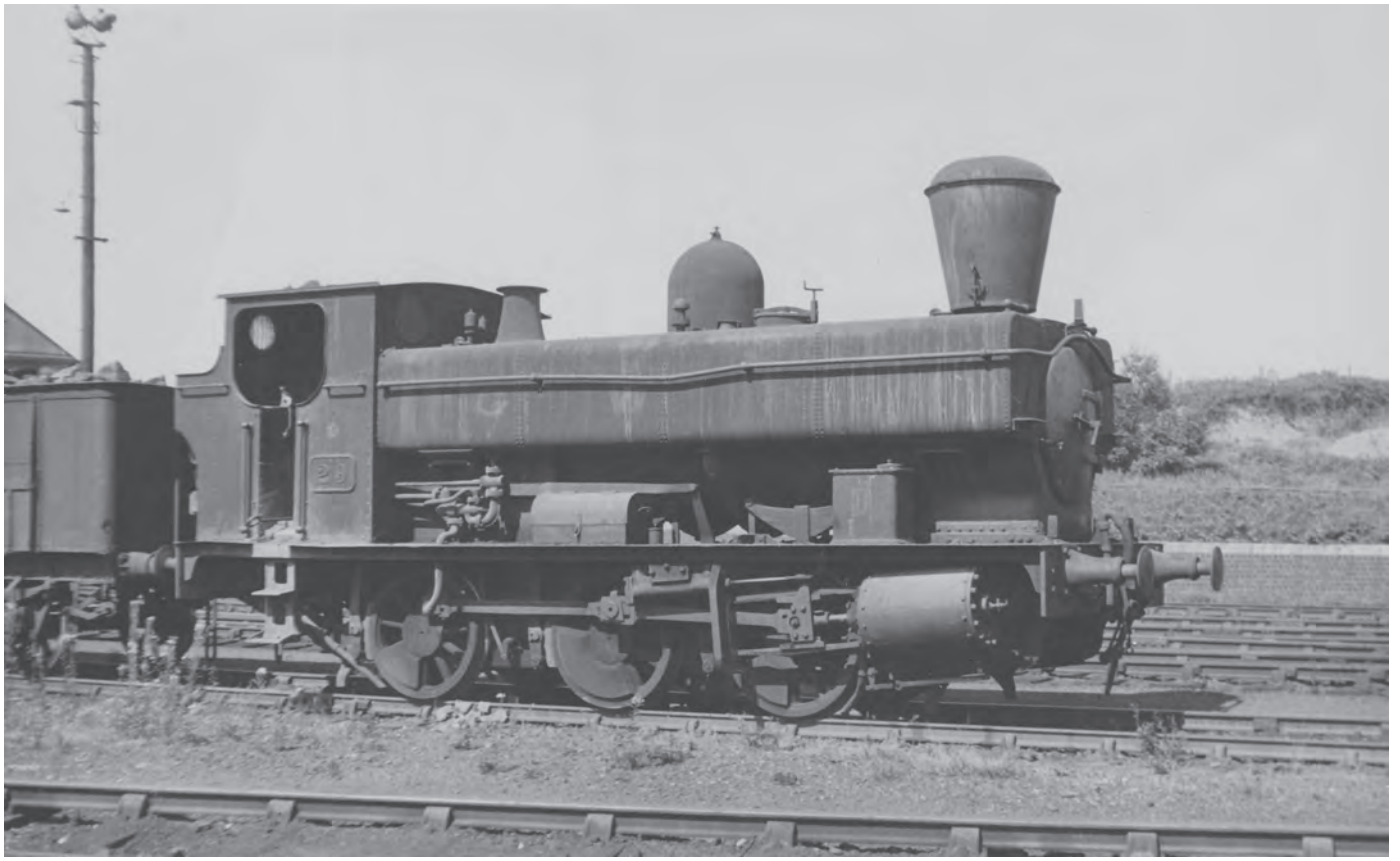

GW 29, rebuilt as a pannier tank in 1924, at Kidderminster with spark arrester chimney in August and November 1948. (MLS/W. Potter)

No.28, rebuilt as a pannier tank, on a mixed passenger/goods train, c1932. (GW Trust/P.J. Reed Collection)

GW 29 with '2021' class 2051, both equipped with spark arrester chimneys, at Kidderminster, 3 June 1951. (MLS/N.H. Spilsbury)

Rhymney Railway: Class 57 0-6-2ST, 1890-1900 (GW 87-148)

Vulcan Foundry built five double-framed 0-6-2 saddle tanks, numbered 57-61, in 1890 – an extended version of an 1884 0-6-0ST with larger bunker. Six more (67-72) were added by the same builder in 1891, then seventeen were built by Sharp Stewart in 1894 and 1897. Hudswell Clarke constructed a further nine in 1899 and 1900 and Neilson Reid completed the class of forty-seven with a final batch of ten in 1900. The later engines were fitted with Westinghouse or vacuum brakes to enable them to operate passenger trains. The initial dimensions were: coupled wheel diameter 4ft 7in, radial wheels 3ft 8in, two inside 17½in x 24in cylinders, boiler pressure 140 lbs psi (raised to 150 lbs after 1899), heating surface 1,171.1sqft, grate area 16.4sqft. The saddle tank held 1,200 gallons and the bunker 2¾ tons of coal. Total weight was 54 tons 6 cwt and the axleload was 16½ tons. Modified boilers were fitted from 1911.

At the absorption of the Rhymney Railway by the GWR in 1922, the class was divided between Cardiff Docks, Senghenydd, Rhymney, Dowlais and Merthyr. New numbers ranging from 87 (ex RR 57) to 148 (ex RR 105) were allocated and six were rebuilt with pannier tanks (1,000 gallon capacity) between 1926 and 1931. The engines converted were:

97 (ex RR 67)
122 (ex RR 85)
136 (ex RR 93)
138 (ex RR 95)
139 (ex RR 96)
141 (ex RR 99)

The last saddle tanks (143 and 145) were withdrawn in 1931 and the pannier tanks followed, two in 1932 and the remaining four (136, 138, 139 and 141) in 1934. A couple of the latter, fitted with copper cap chimneys, acted as Swindon

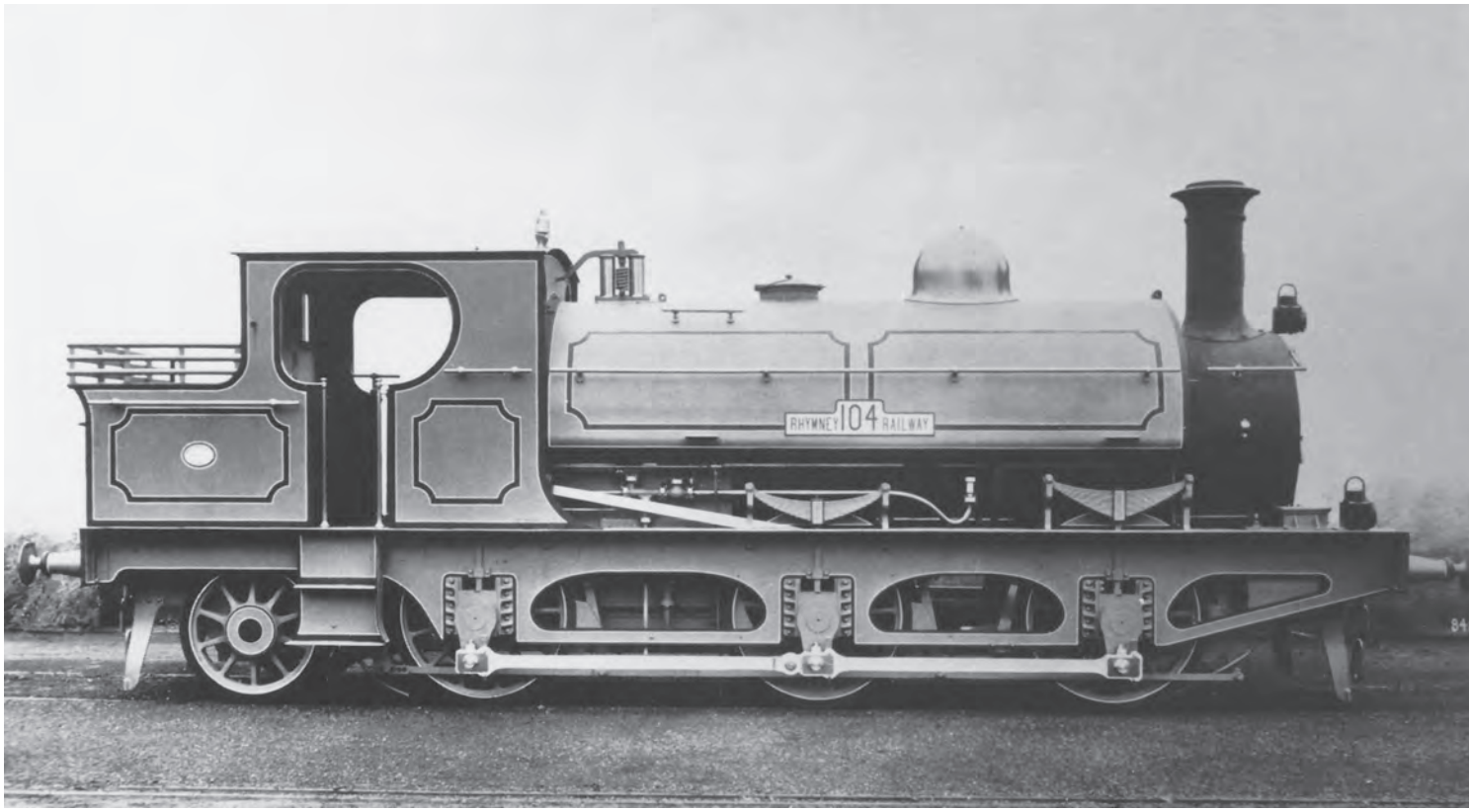

Neilson Reid 0-6-2ST No.104, built for the Rhymney Railway in 1900, as built (later GW 147). This locomotive remained a saddle tank until its withdrawal. (MLS)

A Rhymney Railway Sharp Stewart 0-6-2 saddle tank, No.74 (later GW 107) on the 5.5pm Cardiff-Rhymney passenger train at Heath South, 11 August 1913. (MLS/Bob Miller Collection)

Sharp Stewart 0-6-2ST No.82 (GW 117) with a workman's train at Cyfarthfa Works, c1922. (MLS/Bob Miller Collection)

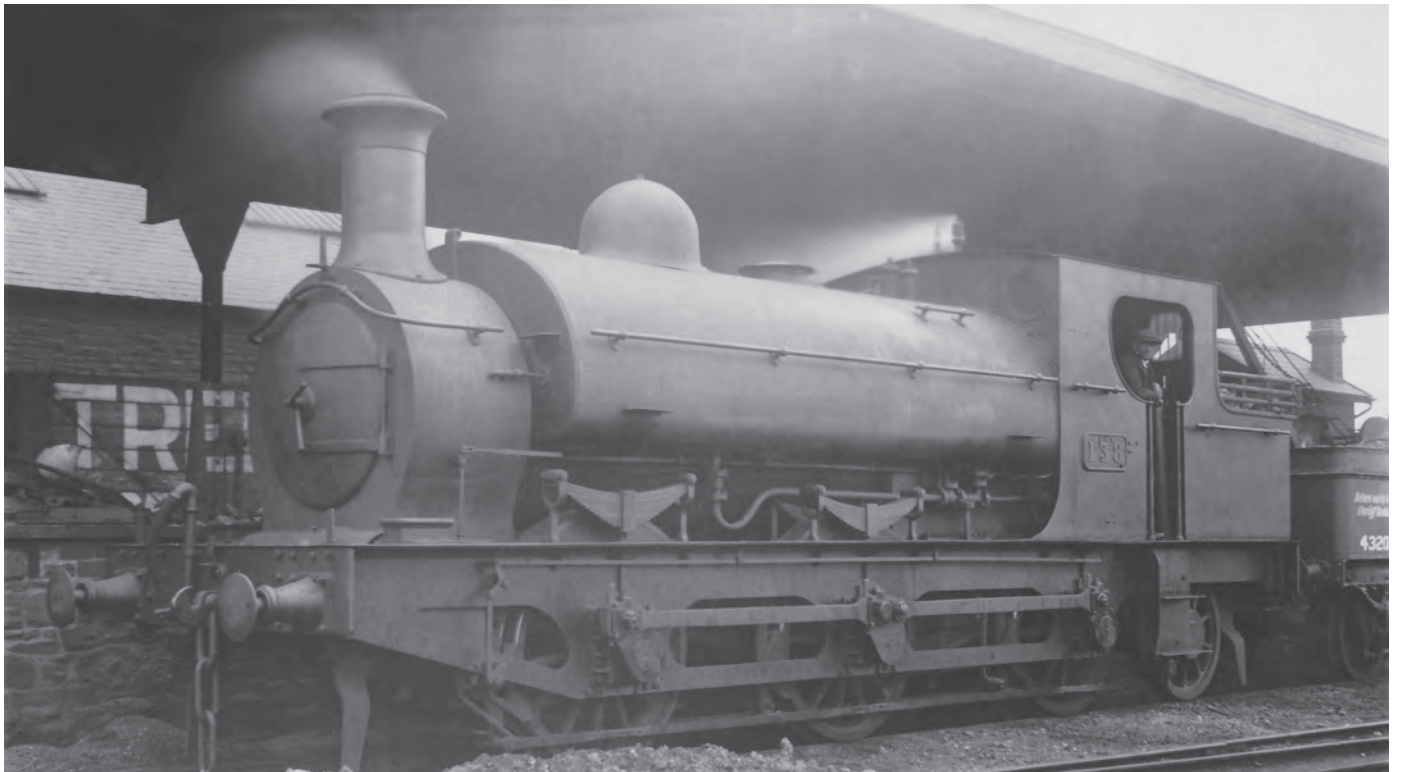

Rhymney Railway No.95, 0-6-2ST built in 1900, photographed before conversion to pannier tank form in July 1926, c1925. (MLS/Bob Miller Collection)

136, former Rhymney Railway 93, built in 1900, rebuilt with pannier tanks in June 1929 and withdrawn in June 1934, c1930. (MLS/Bob Miller Collection)

136 with a passenger train at an unidentified location, c1933. (MLS/Bob Miller Collection)

Works shunters during the summer of 1934. The highest mileage achieved – 797,962 – was by a saddle tank, No. 90 (ex RR 60).

South Wales Mineral Railway: Avonside 0-6-0ST, 1873 (GW 817-818)

The South Wales Mineral Railway was originally a broad gauge railway from Briton Ferry to Glyncorrwg Colliery north of Cymmer Afan and Maesteg. It was taken over by the GWR in 1908, although not completely absorbed until 1923. When the broad gauge was replaced in 1872, the GWR built three class '645' saddle tanks at Wolverhampton Works for the SWM which were numbered 1-3, and a fourth engine of the same class, GW's 767, was sold to the railway in 1875. Two of these engines were scrapped immediately after the GWR took over the SWM, but Nos. 2 and 4 (ex 767) were retained as colliery shunters at Glyncorrwg. Three were replaced by other '645' class GW engines of a later build.

Two 0-6-0 saddle tanks from the former South Devon Railway were bought from the GWR in 1905 and numbered SWM 6 and 7. They had been built in 1873 by the Avonside Engine Company as broad gauge engines named *Emperor* and *Achilles* as 2167 and 2169, rebuilt to standard gauge as GW 1317 and 1324. 1324 had a flush top '2301' type boiler but 1317 had a Belpaire boiler and both survived the 1908 take-over and became GW 817 and 818 at the 1923 'Grouping'. They had 17in x 24in cylinders, 4ft 10in diameter wheels, 150 lbs psi boiler pressure and, with 1,120 gallon

GW 818, South Wales Mineral Railway No.7, ex South Devon Railway 0-6-0ST built in 1873, rebuilt as a pannier tank in 1924. (MLS)

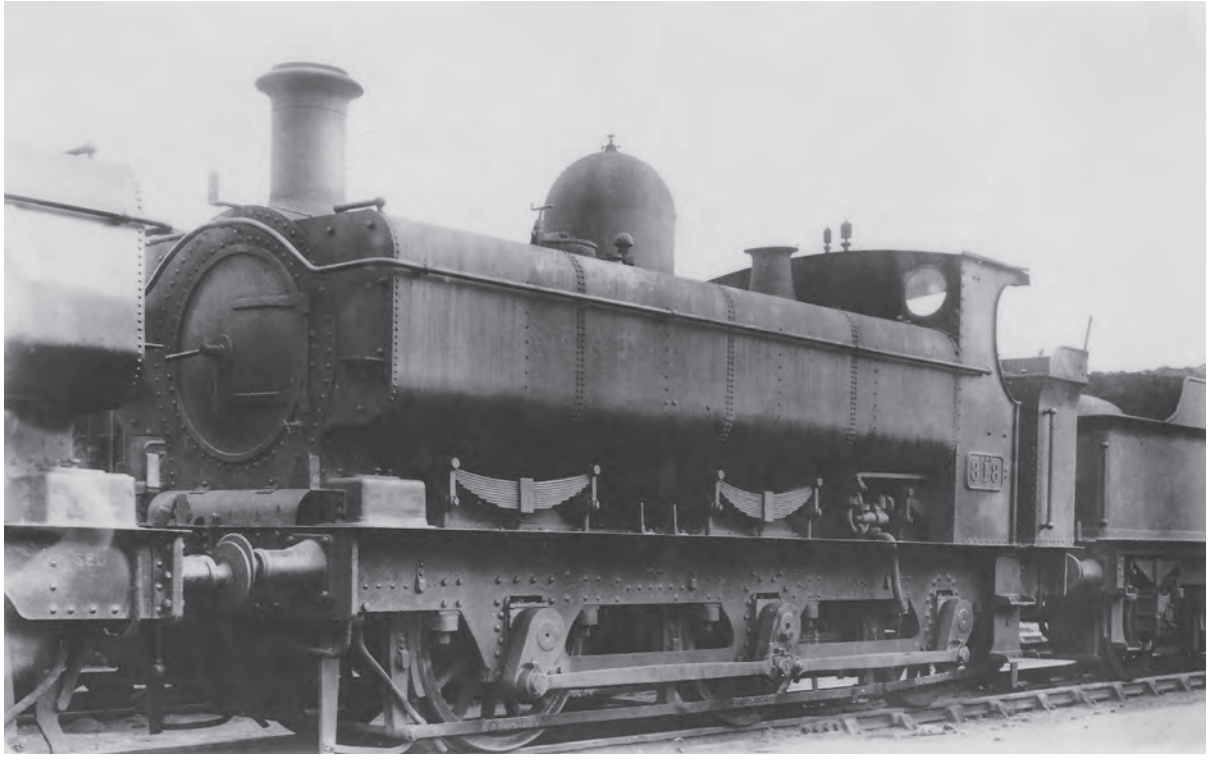

0-4-0ST Powlesland & Mason No.14, renumbered 928 by the GWR, the last of twelve saddle tanks delivered between 1903 and 1912, on Swansea Docks, c1925. (MLS /Bob Miller Collection)

GW 795, ex P&M 0-4-0 saddle tank No.5 built in 1903, rebuilt as a pannier tank in 1926 and sold to Pontardawe Steel Works in 1929, at RTB Pontardawe named *Dorothy* , 9 April 1950. (MLS/K.J. Cooper)

tank capacity, weighed 42 tons 12 cwt (818) and 47 tons (817). 818's axleload was just under 15 tons. 818 was reboilered with a Belpaire B4 boiler in 1924 and fitted with 1,200 gallon pannier tanks.

In the GWR era, the two engines were based at Duffryn Yard. 817 was withdrawn as a saddle tank in 1926, but the pannier tank survived to May 1932, with a recorded mileage of 344,793 accumulated over its fifty-nine year life.

Powlesland & Mason - Swansea Harbour Trust: Brush 0-4-0ST, 1903 (GW 795)

Powlesland and Mason operated the Swansea Harbour Trust's lines for the GWR between 1865 and 1923. Twelve 0-4-0 saddle tanks were built between 1903 and 1912 and numbered 5-12 and 14. Nos. 5 and 6 were outside cylinder engines built by Brush Electrical Engineering Company in 1903 and 1906 respectively. Cylinders were 14in x 21in, wheel diameter 3ft 7in, though later quoted as 14in x 20in and 3ft 6in. No.5 was renumbered as GW 795 and rebuilt in 1926 with a new boiler and pannier tanks, its final dimensions being: boiler pressure 140 lbs psi, heating surface 561sqft, grate area 9.45sqft, tank capacity 660 gallons and weight 26 tons 3 cwt, with 13 ton 17 cwt axleload. Tractive effort was 11,105 lbs.

It was withdrawn in June 1929 and because of its relatively recent rebuilding, put on the Sales List. It was sold to the company owning Pontardawe Steel Works and after its acquisition in 1947 by Richard Thomas & Baldwin's,

was named *Dorothy*. It was not scrapped until around 1963. Few of the saddle tanks lasted long after 1923, although No.6 (GW 921), the other outside cylinder 0-4-0ST, was sold for industrial use in 1928 and is preserved and remains in the store of the Leicestershire County Museum at Snibston.

Port Talbot Railway: Hudswell Clarke 0-6-0ST, 1900 (GW 811-814)

The Port Talbot Railway was incorporated in 1894 to link the collieries in the Llynfi and Garw valleys with Port Talbot Docks. Two 0-6-0 saddle tanks were acquired from Robert Stephenson & Co. in 1897 and six 0-6-2Ts and another 0-6-0T followed in 1898. Two 0-6-0STs survived to be numbered 815 and 816 by the GWR. In 1900, Hudswell Clarke built six 0-6-0STs, numbered 22-27, which were more powerful, with 4ft diameter wheels and 17,410 tractive effort. All survived to GW ownership, but just four received GW numbers 811-814 and all except 813 had been scrapped by the early 1930s. It was sold in January 1934 to Robert Stephenson & Co. It was still operational at Backworth Colliery in the North East in the early 1960s.

Preservation

813

Unfortunately, no pre-grouping GWR or absorbed company pannier tanks (or their saddle tank predecessors) have been preserved even though some of the Barry 'F' class saddle and pannier tanks were still operational with the NCB in Northumberland in the 1960s. However, one saddle tank of this class of six built for the Port Talbot Railway has survived, though

Former Port Talbot Railway ST No.26, renumbered 813 by the GWR and sold in 1934 via R. Stephenson & Co. for Backworth Colliery where it was renumbered 12. It is photographed at the colliery around 1946 before becoming the property of the NCB. (MLS/Bob Miller Collection)

Port Talbot Railway saddle tank as GW No.813 in green livery at Bewdley station during the Severn Valley Railway Autumn Steam Gala, 23 September 2017. (David Maidment)

none of them was ever equipped with pannier tanks, so it really falls outside the scope of this book. However, it is the best example we have of what a GWR 0-6-0 saddle tank looked like before conversion to pannier tank form.

813 was built by Hudswell Clarke in 1901 for the Port Talbot Railway, where it was numbered 26 and based at Duffryn Yard. It had 16in x 24in inside cylinders, 4ft 0½in diameter wheels, 160lbs psi boiler and with tank capacity of 900 gallons and bunker holding 2 tons of coal, it weighed 44 tons. After 1908, the railway was operated by the GWR but No.26 was not taken into GW stock until 1922 when it was sent to Swindon for overhaul returning to traffic in 1924 as No.813. It was withdrawn in 1933 and put on the Swindon Sales List and sold to Robert Stephenson & Co. who resold it to Backworth Colliery Ltd in Northumberland, where it received the number 12. It passed on to the NCB in 1947, was renumbered again as 11, received a new boiler in 1950, but when a new firebox was required in 1962 it was withdrawn. It was purchased by the Severn Valley Railway in November 1967 and cosmetically restored. It was finally restored and steamed in 1984 ready for the GWR 150th anniversary celebrations. However, there were mechanical problems and it was then stored until 1996. It was overhauled at Bridgnorth and returned to steam in 2000, withdrawn in 2009 for overhaul and put back to traffic painted GW green in August 2016. It is now operational on the SVR.

Chapter 4

THE '57XX' COLLETT PANNIER TANKS

Design & Construction

The final development? The 57XX class of 1929 pulled together all that was good in the previous half century of GW shunting and branch engine development. This engine, I would suggest, stands at the apex of 0-6-0 tank engine design, yet it was not revolutionary. From the late 1860s, the Great Western Railway and the Welsh companies that the GW absorbed in 1922 had been evolving myriad designs of saddle tanks that had morphed into the standard GW pannier tanks of the 4ft 1½in '2021' class and the 4ft 7½in '2721' class. There were later designs, of course, in the Hawksworth era, but they did not replace the 5700s and it was the latter class which eked out their final days on the Southern and London Midland Regions and London Transport after the cessation of steam on their native Western domain.

Churchward had put his main thrust of development into equipping the company with powerful and efficient main line passenger and freight engines, followed by standard mixed traffic designs of both tender and tank version. The Works did not have the capacity for significant building of new designs of shunting engines, and in any case, the Victorian saddle tanks were robust and useful, and the main interest that Churchward had was in equipping them with his latest developments in boiler design, including the Belpaire firebox. This, together with a need to increase the safe speeds of the tank engines to fit them for their passenger work (especially following the disaster near Llanelli in 1904 when a '1661' class saddle tank piloting a 'Bulldog' on the 10.35am New Milford to Paddington express derailed due to its instability at the speeds required), led to the steady replacement of the saddle tanks by twin panniers from the early years of the twentieth century.

Faced, however, with the ageing of many of the earlier classes which had now exceeded fifty years and more than a million miles in traffic, and the need to cut production and maintenance costs as the Depression struck the country, Charles Collett decided to replace the oldest examples with a new standard design evolved from the '2721' class, with minor variations to the springing and other details reverting back to the '1854' class of 1890 with its ancestry of the '1813' class of 1882 and the '645' class of 1872. The boiler pressure was increased from the 165 and 180 lbs psi of the earlier engines already rebuilt with later boilers, to 200 lbs psi which gave a tractive effort of 22,515 lbs, the extra power in BR days being recognised with the designation of '4F' compared to '3F' for most of the earlier designs (and shunting engines on other railways). Their other dimensions were: inside cylinders 17½in x 24in, wheel diameter 4ft 7½in, total heating surface 1,178sqft, grate area 15.3sqft, tank capacity 1,200 gallons, bunker capacity 3 tons 6 cwt of coal, total weight 47½ tons with a maximum axleload of 16 tons 15cwt, putting them in the 'blue' route availability category, although from 1950 onwards they were reclassified 'yellow' (apart from the ten heavier condenser locomotives) as the experienced hammer blow on the track was low. The engines were not superheated as it was felt to be an unnecessary expense as so much

time of shunting engines is spent standing.

Another influence on the GW directors at this time no doubt was the availability of government loans to alleviate unemployment (the GWR was expert at taking advantage of government grants and loans throughout the 1930s) so the building of the 57XX class was spread over many builders in the UK. The first fifty, 5700-5749, were built in 1929 by the North British Company in Glasgow simultaneously with 5750-5799 being built at Swindon Works. 6700-6724 were constructed by Bagnall's and 6725-6749 by the Yorkshire Engine Company in 1930. 7700-7724 were built by Kerr Stuart, 7725-7774 by the North British Company and 7775-7799 by Armstrong Whitworth in 1930/1, 8700-8724 by Beyer Peacock and 8725-8749 by W.G. Bagnall in 1931 (exact building dates are in the appendix). All these engines had flat topped enclosed cabs similar to those fitted to the '2021' and '2721' classes.

There was then a pause until 1933, when Swindon built 9701-9710 with condensing gear for use on through goods trains to Smithfield over London Transport lines, after initial experimentation with 8700, to replace the '633' class side condensing tanks previously utilised. The reduced pannier size, cut back at the front to encompass the condensing pipes, was 1,080 gallons and the weight increased to 50 tons 14 cwt on the experimental engine, but the ten production engines increased the tank size to hold 1,230 gallons by deepening the tanks at the back and the cab profile was improved with a rounded top, larger windows and shutter slides. However, bunker capacity was reduced to 2 tons 16 cwt and the weight increased to 50 tons 15 cwt, axleload 17 tons 4 cwt. 8700 was rebuilt in line with the production engines and became 9700, whilst a new 8700 was constructed with 8750-8799 in 1933/4 at Swindon. Swindon then continued to build more of the class with the new cab design throughout the 1930s, with nearly all of the Victorian pannier and remaining saddle tanks being withdrawn during this period, the '2021' and '2721' classes being the exception with many surviving the Second World War and only

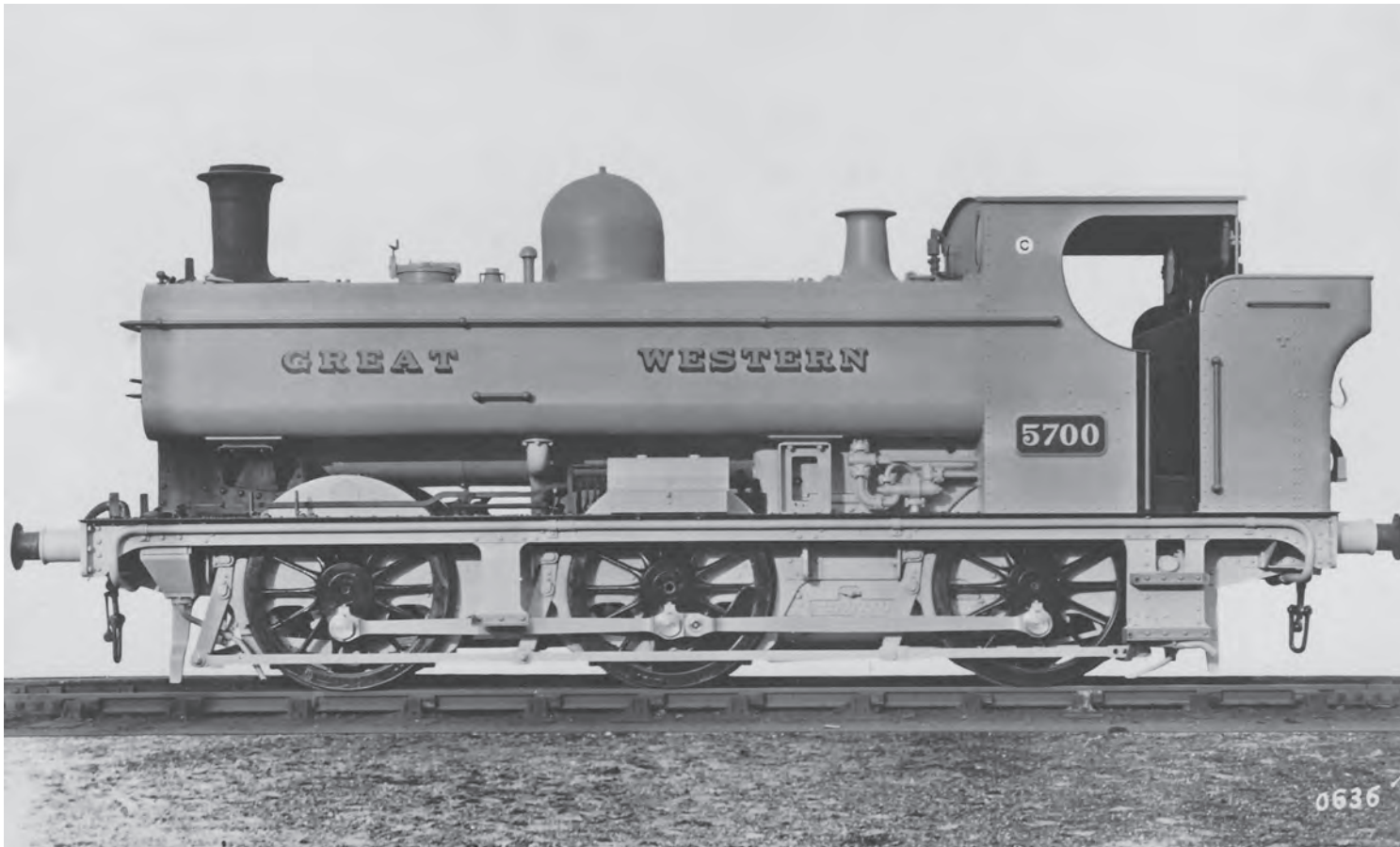

The prototype 5700 in works photographic grey, 1929. (MLS/F. Moore)

The North British built 5712 at Oxley, 29 August 1936. (MLS/Bob Miller Collection)

Kerr Stewart 7713 as built new in 1931, with 'Star' 4012 in the background. (MLS/F. Moore)

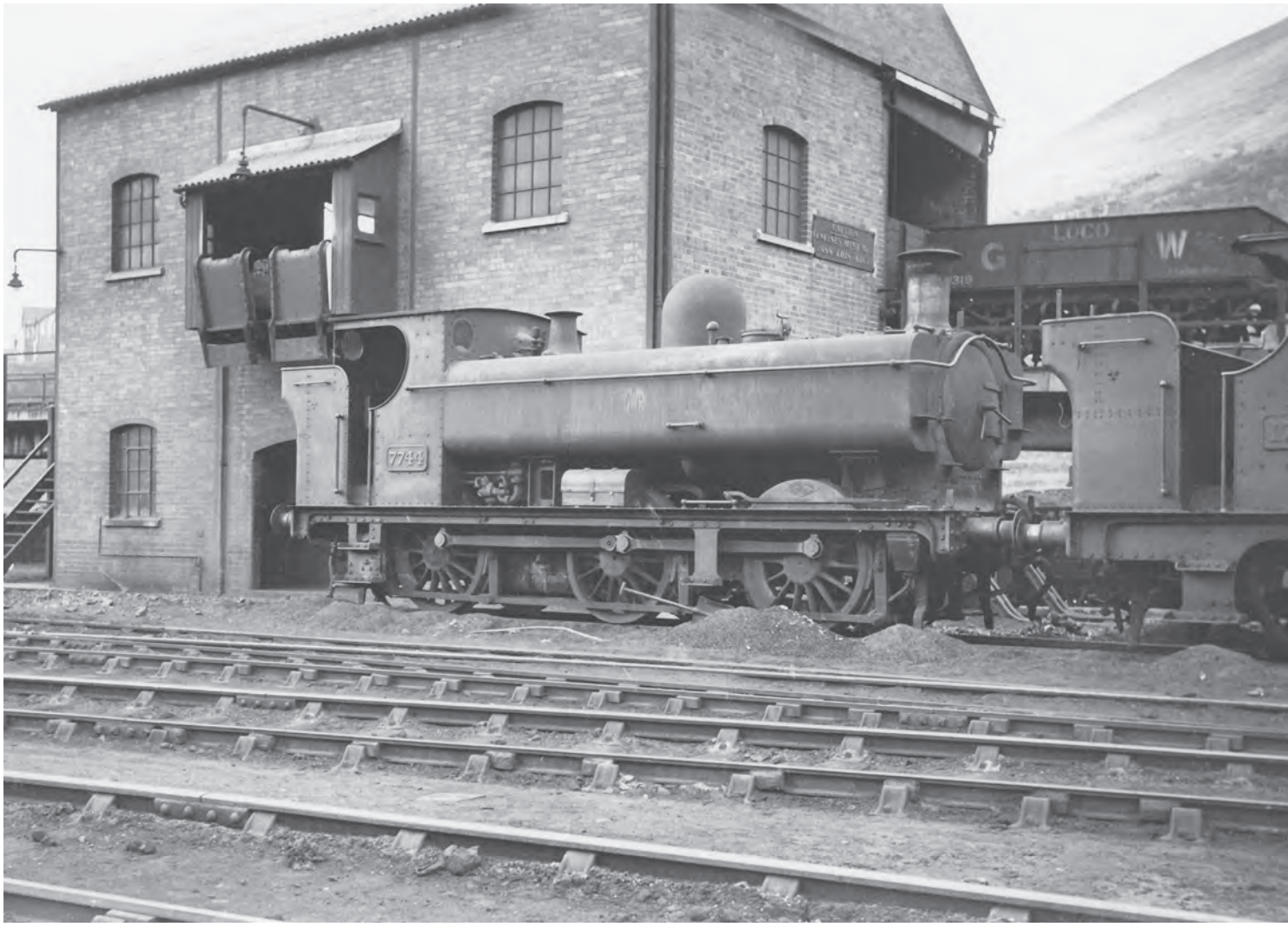

North British built 7744 at Duffryn Yard depot, Port Talbot, 28 March 1937. (F.K. Davies/John Hodge Collection)

being withdrawn in the early years of nationalisation.

9711-9759 were built in 1934/5, 9760-99 in 1935, 3700-3799 in 1936-8, 3600-3699 in 1938-40. Production continued during the war, with 4600-4699 being built between 1941 and 1944, and 9600-9621 in 1945. Post-war, 9622-9682 were built from 1945 through to 1949, and last of all 6750-6779 between 1947 and 1950 with only steam brakes and three link couplings for dock shunting and trip working and mineral trains in the valleys. All the rest had vacuum brakes and those not built with ATC equipment were fitted from the early 1930s – again, apart from the 67XX series. Thus, the building to an almost identical design spanned twenty-one years, putting its design longevity almost on a par with the equally successful 'Castle' class. The final total for the class was 863, second only to the LNWR Victorian DX 0-6-0 goods engines (943 examples) and exceeding the number of the LMS 'Black Fives' (842 locomotives). That there were so many built over so many years spells out their success - such power for so compact a locomotive, with experience in South Wales indicating that they outshone the larger 0-6-2Ts of both pre-grouping and GWR designs.

A number of panniers were fitted with spark arrester chimneys for working in the Provender

8764 with the revised cab profile at Old Oak Common to which it went new in 1933, c1938. (MLS/Photomatic)

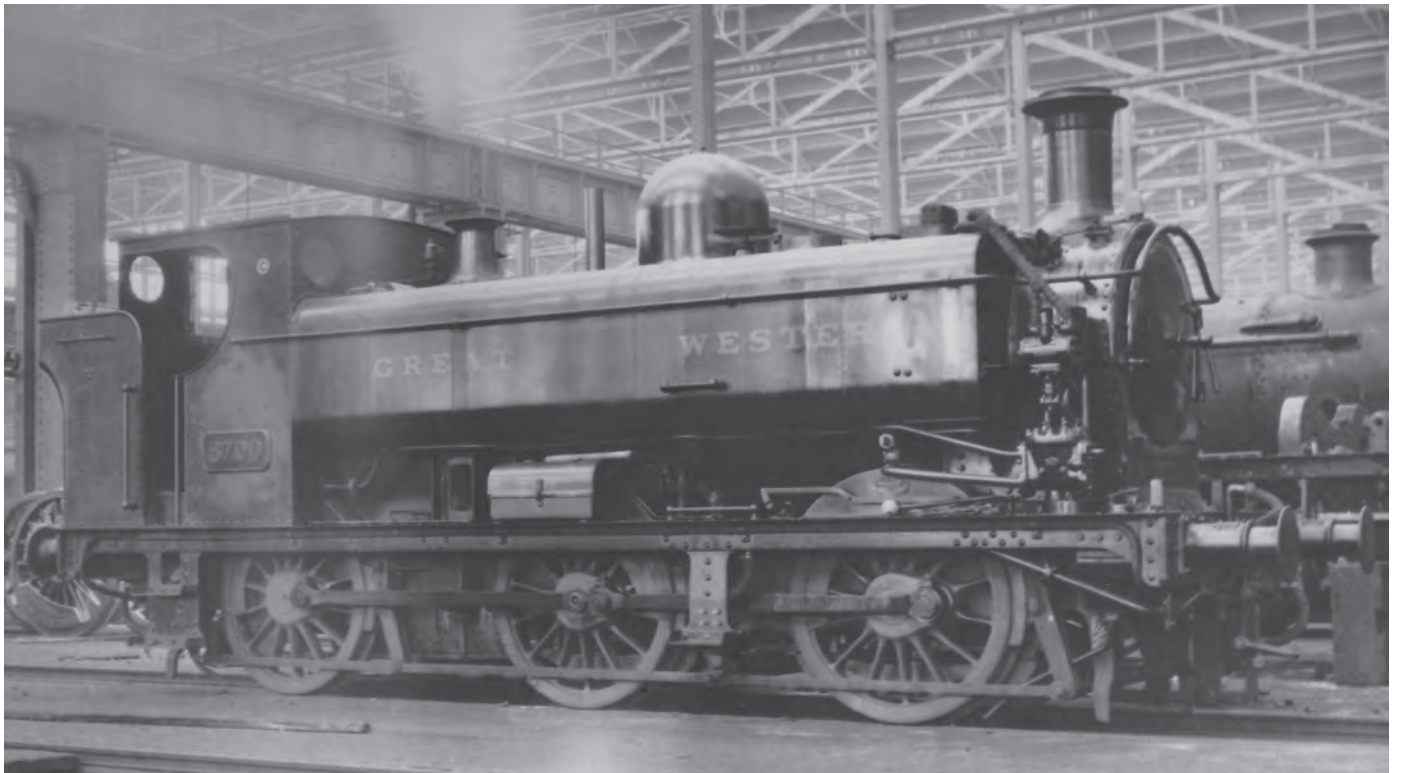

8700 was built by Beyer Peacock in 1931, but in March 1932 it was rebuilt with condensing gear to enable it to run over the LT 'widened lines' to Smithfield. It was further rebuilt as condensing tank 9700 with curved roof profile in conformity with 9701-10, in January 1934, being replaced as 8700 by a new build. It is pictured here after conversion at Swindon Works, March 1932. (MLS)

The replacement for the 8700 converted to 9700 condensing tank, numbered 8700 but built by Swindon in 1934 in the '8750' series. However, instead of having the rounded roof profile, it received the flat roof from the discarded part of the original 8700 when that was rebuilt in 1934. It is at Swindon in 1948, with new smokebox door numberplate fitted but the GWR button icon still on the tank side. (MLS)

The prototype production condenser 57XX, 9701, 1933. (MLS/F. Moore)

9700, the condensing tank converted from 8700, as modified with raised curved cab roof in line with 9701-9710, at Old Oak Common, c1938. (MLS/F. Moore)

Store, Royal Ordnance and RAF munitions stores at Didcot during and after the war (3709, 3721, 4601, 5710, 5744, 5752, 5757, 7709, 7713, 8738, 8757 and 9722 were all noted fitted at some stage). 3711 of Aberbeeg was converted to oil firing at Robert Stephenson's Works at Newcastle in 1958, sent to Swindon for testing and then allocated to Old Oak Common for empty stock working to Paddington to reduce coal fume pollution under the station arches, but it remained a lone example and was withdrawn in May 1963.

The 57XX were painted unlined GW green, initially with 'GREAT WESTERN' or 'GWR' on the tank side, later replaced by the GWR button symbol. From 1948, they were painted the standard BR plain black with the 'lion and wheel' insignia, although four of the Old Oak Common '8750' series (8763, 8764, 8771 and 8773) were lined out in the mixed traffic livery as they were under public scrutiny working ECS trains in and out of Paddington. The black livery was frequently left unpainted at overhaul and many revealed the GWR lettering under the wear and grime long after nationalisation. Smokebox door numberplates were added but none of them received the GW lined green livery that Swindon applied to so many of its engines after 1956. Many received the later BR symbol and the thirteen that spent time on London Transport received that organisation's lined maroon livery.

3726, built in 1937 and withdrawn in January 1962, in the early British Railways livery, c1949. (MLS/Real Photos)

5709 ex works at Swindon repainted with the 'lion and wheel' symbol on the tankside, c1955. (MLS)

6738, built by the Yorkshire Engine Company in 1930 for unfitted freight work and shunting in the South Wales Docks at Barry, 11 September 1958. (MLS/A.C. Gilbert)

Aberbeeg's 3711 at Swindon Works after conversion to oil firing, 27 July 1958. It was then reallocated to Old Oak Common for trials on the empty stock working to Paddington. The oil tank is visible on the bunker. (MLS)

The 1948 built 6760 with an earlier 1930 built 67XX at Newport Pill shed, 20 September 1959. (MLS)

Condenser tanks 9700 (ex 8700) and 9704 at Old Oak Common, 16 August 1959. (Ken Wightman)

5744 shorn of its spark arrester chimney and left with the stovepipe rather than GW Collett chimney, transferred from Didcot to Truro, 29 April 1961. (R.C. Riley)

8773, in BR plain black livery with the later BR emblem, at Old Oak Common, 2 April 1963. (R.C. Riley)

3615 at Worcester in the rundown state of the last year of Western Region steam power, already shorn of smokebox door and cab numberplates, 30 May 1965. 3615 was withdrawn in October. (MLS)

The end draws near for a number of pannier tanks at the Swindon Dump awaiting their fate, including 7759, 9496 and another 77XX, 10 June 1960. (MLS)

1947 built 6750 being cut up at Swindon, 6 November 1960. (R.C. Riley)

Operation

Initially, a large proportion of the 1929 Swindon built locomotives of the 5750-5799 series were allocated to Old Oak Common, whilst the commercial company built engines (5700-5749) were spread all over the company's lines, with half of them being sent to South Wales sheds. Because of the large number produced by different builders simultaneously, some even went immediately into store as the Depression bit production and were put to traffic as the older saddle and pannier tanks were withdrawn and traffic activity increased. They were not just shunting engines although they performed much of that work. They worked passenger branch trains – as did the saddle tanks before them – pick-up goods, mainline freight short distance and yard transfer work and the occasional main line passenger train, for example portions of expresses when they had short runs to locations like Kingswear from Newton Abbot or Cardiff from Pontypool Road. The 67XX series were primarily dock shunters and mineral train trip working in and to Newport, Cardiff, Barry and Swansea Docks. The condenser 9700-9710 spent most of their lives at Old Oak Common with their availability to go over LT underground lines, although they worked turn and turn about with 81A's other panniers on the depot's other shunting ad ECS duties. By the end of their career, I can only trace Machynlleth shed that never had an allocation of even one of the 863 engines.

An analysis of their initial allocations gives in summary these main depots in descending order:

1929-33 locomotives	
Old Oak Common	45*
Bristol SPM	31
Ebbw Junction	27
Cardiff East Dock	17

Tyseley	16
Neath	15
Duffryn Yard	15
Newport Pill	15
Canton	14
Stourbridge	10
Oxley	10
Llanelli	9
Gloucester	8
Pontypool Road	8
Tondu	8
Westbury	8

*In 1933 twenty-two of the '8750' series replaced a similar number of earlier Old Oak Common allocations and eleven condensing tanks were also allocated there.

The peak of their production came in 1937/8 with over 170 built in those two years and were allocated as follows:

Old Oak Common	20
Bristol SPM	15
Tyseley	14
Aberbeeg	11
Ebbw Junction	10
Swindon	9
Pontypool	8
Neath	7
Stafford Road	7
Oxford	7

1940-45 (wartime build)

Old Oak Common	16
Bristol SPM	13
Canton	10
Shrewsbury	8
Laira	7
Tyseley	7
Southall	7

1946-50 (post-war build)

Cardiff East Dock	10
Barry	9
Ebbw Junction	6
Newport Pill	5
Tondu	5

A picture of the widespread use of the 57XX is seen from an analysis of the final depots from which they were withdrawn. The early dieselisation of the Western Region's Plymouth Division meant that the panniers of Newton Abbot, Laira, Exeter and the Cornish depots were, by and large, still in good enough repair to be transferred to other depots to finish their lives. The complete allocation as they were withdrawn, again in descending order, is given below:

Neath	66
Swansea East Dock	53
Old Oak Common	44
Ebbw Junction	42

5757 heads a southbound goods at Addison Road, c1938. This pannier was to be one of the first two sold to London Transport in 1957 as L91. (MLS/Bob Miller Collection)

Duffyrn Yard shed with an assortment of pannier tanks including 3791 and 1756 (an '1854' class engine that had been owned by the Swansea & Rhondda Bay Railway until 1922) and Collett 0-6-0 2284 with an ex-ROD tender, 7 May 1939. (F.K. Davies/John Hodge Collection)

Llanelli	34
Pontypool Road	31
Westbury & Newport Pill	29
Gloucester & Duffryn Yard	27
Barry & Stourbridge	24
Southall, Oxley & Cardiff East Dock	20
Swindon & Radyr	19
Tyseley & Croes Newydd	18
Bristol Barrow Rd & Tondu	17
Aberdare & Abercynon	16
Bristol SPM	14
Taunton, Severn Tunnel Jcn, Shrewsbury & London Transport	13
Didcot & Aberbeeg	12
Worcester	11
Hereford	10
Oxford	9
Merthyr & Nine Elms	8
Swansea Victoria, Neyland, Templecombe & Goodwick	7
Canton & Exmouth Junction	6
Reading, Yeovil & Llantrisant	5
Slough, St Blazey, Chester & Bath Green Park	4
Exeter, Leamington & Kidderminster	3
Weymouth, Truro, Stafford Road, Treherbert, Oswestry & Danygraig	2
Cardiff Cathays, Tredegar, Landore, Carmarthen & Salisbury	1

Notable absentees from the list are Banbury, Bristol Bath Road, Newton Abbot and Laira, which all had significant allocations before dieselisation. Many Bristol SPM engines moved to the former Midland's Barrow Road when that shed closed.

Old Oak's condenser tank 9704 wheels empty vanfits and refrigerated containers from Smithfield Market via the Metropolitan lines past Paddington Goods depot, c1947. (MLS)

3636 at the head of a Western Valley passenger train at Newport High Street, 25.6.1948.
(F.K. Davies/John Hodge Collection)

9672 shortly after construction at its newly allocated depot, Shrewsbury, with GW mogul 6348 and LNWR 0-6-0 'Cauliflower Goods' 28608, c1948.
(MLS/H.H. Duck)

A 46XX acts as Reading General station pilot at the head of LSWR coaches that have arrived from Basingstoke, c1948. (GW Trust)

9741 on a mixed train at Buildwas, 2 October 1954. (MLS)

9633 at Aller Junction with the Newton Abbot – Paignton portion of the *Devonian,* 25 May 1955. (MLS/C.H. Owen)

Two branch trains at Buildwas Junction, 4605 and 9741 at the far end, 25 October 1955. (MLS/N. Fields)

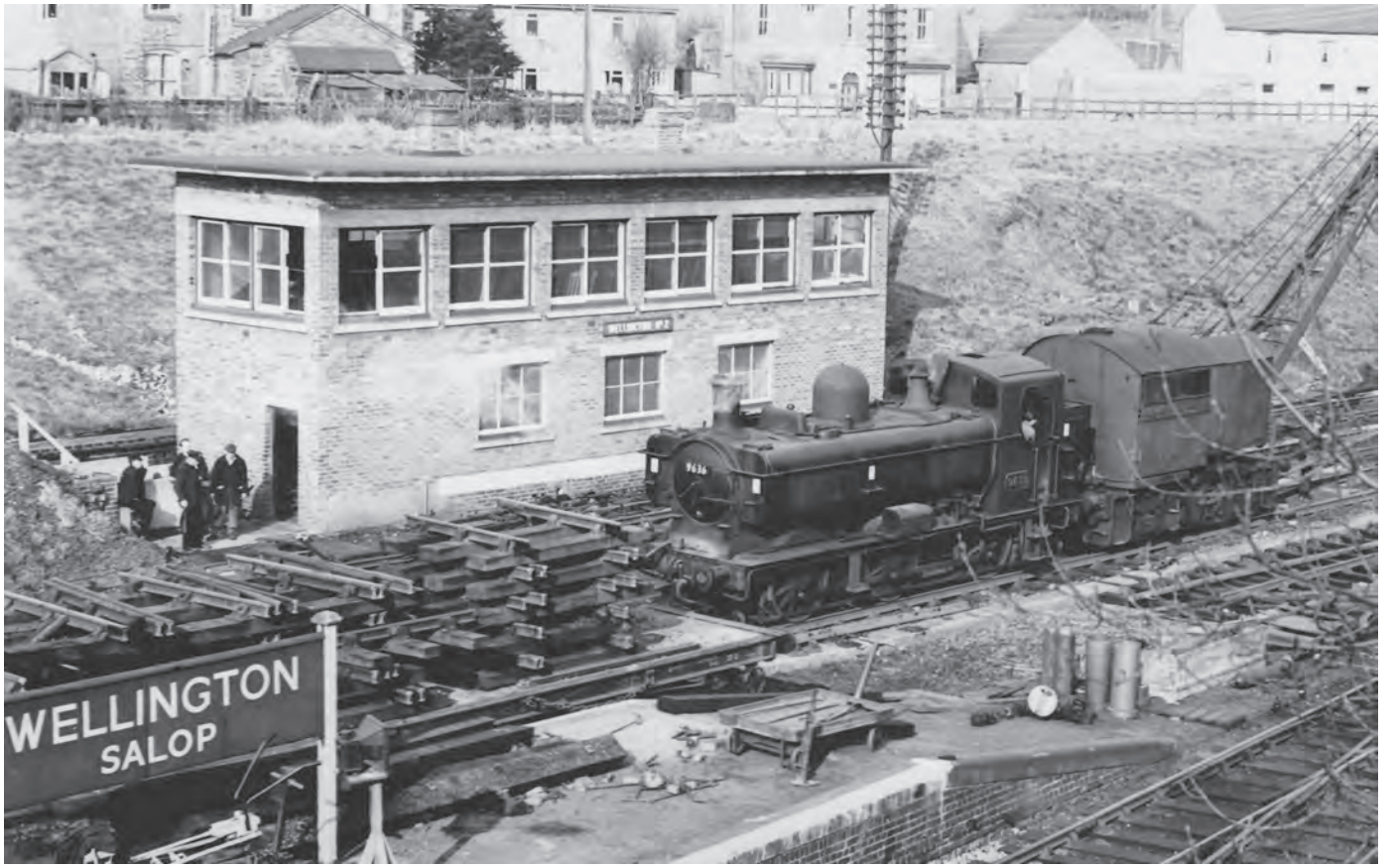

9636 on an engineering train at Wellington (Shropshire), c1956. (MLS/N. Harrop)

3605 lifts a freight from Pontypool Road to Crumlin High Level and the Vale of Neath line banked by a GW 2-8-2T, 7201, passed by Aberdare's sole mogul, 6361, on a Pontypool Road bound freight, 31 March 1956. (MLS)

5766 at Princes Risborough station with the 2.10pm branch train to Watlington, 13 October 1956. (MLS/N. Harrop)

9655 at Fowey with the 10.20am arrival from Lostwithiel, 20 August 1957. (MLS/N. Harrop)

8785 on a passenger train at Pantyffynnon while 8749 stands with a freight behind, 27 May 1957. (F.K. Davies/John Hodge Collection)

9758 with a cross-London freight at Stewarts Lane, 18 February 1958. (MLS)

4663 in Minehead Yard assembling a short goods train whilst a 41XX 2-6-2T stands in the platform with a train for Taunton, c1958. (Bruce Oliver)

3789 with a pick-up goods train for Oswestry at Ellesmere, 28 April 1959. (MLS)

5775 and 0-6-2T 6663 double-head the workman's train from the Royal Ordnance Factory at Glascoed to Aberbeeg where it will divide to Brynmawr and Ebbw Vale, c1959. (R.O. Tuck/ John Hodge Collection)

3630 leaves Llangollen beside the River Dee for Ruabon with a freight, 1960. (MLS/N.R. Knight)

9700, an Old Oak Common condenser tank, on unaccustomed duty on an up local passenger train at Hayes, c1958. (Ken Wightman)

4663 heads a branch train to Chard at Taunton station, 15 July 1960. (Bruce Oliver)

9609 departs from Nelson with a Neath – Pontypool Road train, 1963. (John Hodge)

9659 brings the stock of an express into Paddington's No.2 platform, working Old Oak Common 'Target 3' on empty stock activity, 9 July 1963. (Bruce Oliver)

9700, 9704 and a raft of pannier tanks including another condensing 97XX, seven '8750s' and a '94XX' lining up at the Old Oak Common coaling stage, 16August 1959. (R.C. Riley)

Condensing pannier tank 9705 with the empty stock of Mark 1 coaches on platform 1 at Paddington, 1960. (Nick Lera)

4695 with a train of mineral wagons at Pontrhydyfen on the Port Talbot-Cymmer Afan line, 19 August 1959. (John Hodge)

5750 banking a coal train at Panteg & Coedygric Junction, the Eastern Valley line visible behind, 26 March 1959. (S. Rickard/John Hodge Collection)

5716 draws a freight out of the sidings at Fishguard Harbour, the ferry *St David* in the background, c1959. (John Hodge)

An enthusiasts' special *Y Glyn Crwydryn (The Valley Wanderer)* hauled by a pair of panniers, 4612 and 9673, halts at Colbren Junction having arrived from Neath before running round and returning to Swansea East Dock via Pontardawe, Summer 1965. (GW Trust)

4612 with an officers' inspection saloon passes through Exeter St David's, c1960. (Bruce Oliver)

The Rail Performance Society archive contains 111 logs of the 57XX pannier tanks, but the majority are on all-stations local or branch passenger trains with just a couple of coaches and station start-to-stop times only with no indication of the maximum speed reached between stops. A number are in the Brynmawr-Aberbeeg-Ebbw Vale area, with 7742 and 7778 quoted, another with 8796 of Newport Pill on the five coach 6.50pm Newport which split at Aberbeeg Junction with the front three coaches working on to Brynmawr and the rear two to Ebbw Vale. The log starts at Risca where the train was half a minute late. Signal checks in the Crumlin area made the train 5½ minutes late at Llanhilleth and the train divided at Aberbeeg South before the station. Departure of the Brynmawr portion from Aberbeeg was six minutes late and the tank took water at Abertillery reached 2½ minutes late and departure six minutes down again. However, an energetic climb up to its destination saw arrival there just 3½ minutes late. Station stops were very fast, most varying from twenty to thirty seconds. The train division at Aberbeeg South took just 46 seconds!

9759 is silhouetted with a freight over Brentford Docks, 1962. (Nick Lera)

A run on the 6.50pm Hereford-Brecon with 3638 of Brecon shed with four coaches (121 tons) left four minutes late and ran to its first stop, Kinnersley, in 18 minutes 12 seconds, with speed mainly hovering around 35-40mph, with a final fling of 51mph. It then stopped at Eardisley, Whitney, Hay, where it took water, and then all stations to Brecon reached in one hour forty minutes, just ¾ minute late. Speed rose to around 35-40 mph between most stops with 45mph being the maximum noted. After a night's stay locally, the recorder continued to Neath on the 11am Brecon behind 3611 of Neath N&B shed, but the running with just a two coach 'B' set was mainly downhill and of little interest. Arrival at destination was a minute early.

A snippet on a two coach local between Newport and Cardiff in 1955 with 8711 of Ebbw Junction took 18 minutes 46 seconds including a slowing to 5mph at Alexandra Dock Junction where the train switched to the Relief Line. Marshfield was passed at 47mph and 60mph was just reached at Rumney River Bridge. Peter Semmens timed 9601 on the 5.52pm Yeovil (Pen Mill)-Taunton on 11 August 1949 with a two-coach 'B' set. The most interesting section (and the only section where speeds were recorded) was between Langport West and Athelney, completed in 6 minutes 53 seconds with 56mph attained before a signal check approaching Athelney station. 9632 on a Carmarthen-Llandeilo 3-vehicle train murdered the 45 minute schedule, covering the journey in 35 minutes 15 seconds – with a maximum of 50mph at Nantgaredig and 48 at Golden Grove – hopefully the train left Carmarthen late, or a few passengers might have got left behind at the intermediate stations! 4673 with two auto coaches on the Dulverton-Tiverton-Bamford branch ran up to 60mph at Cadeleigh and 56mph before Thorverton. 3723 with two coaches dropped off at Twyford from the 1.24pm Paddington-Reading in May 1956 (hauled from London by 6162) left Twyford 7½ minutes late and arrived at Henley-on-Thames five minutes late with a maximum speed of 46 mph between Twyford and the Wargrave stop.

My final description is the full log recorded by Brian Basterfield on the 4.45pm Paddington *Cathedrals Express* of all trains – the Worcester – Kidderminster portion of four coaches.

7.35pm Worcester Shrub Hill – Kidderminster, 31.3.1959
3775 - 85A
4 chs, 136/145 tons

Miles	Location	Times	Speed	Schedule
0.0	Worcester Shrub Hill	00.00		RT
0.4	Tunnel Junction	–	easy	
2.66	Fernhill Heath	–	63	
5.61	Droitwich Spa	07.55		1 E
0.0		00.00		RT
3.39	Cutnall Green (MP 129.5)	05.09	54	
5.74	Hartlebury	08.00		1 E
0.0		00.00		1 E
3.71	Kidderminster	05.55	52	2 E

Mr Basterfield remarked 'The crew were really enjoying themselves on this one.'

In the last five years, a number of new moves became apparent. The Southern Region obtained twelve pannier tanks in January 1959 and used six each at Folkestone Harbour and Nine Elms (for Waterloo-Clapham Junction ECS movements). In February 1958, Weymouth WR shed with its thirteen panniers was transferred to the Southern Region, and at the Regional boundary change in September 1962 the Western Region introduced pannier tanks to Salisbury, Templecombe and Exmouth Junction. Although the panniers were more powerful and did the job, due to the innate conservatism and regional loyalties, they were not always popular with the SR crews as their cabs were more cramped when compared with the venerable LSWR M7s and some problems occurred with the compatibility of vacuum brake pressures between the SR rolling stock and the WR locomotives.

After earlier boundary changes in the 1950s, a number of panniers in the former Shrewsbury and Wolverhampton Divisions were transferred to the London Midland Region and survived well into 1966 after Western steam was extinguished, at Croes Newydd, Tyseley and Oxley. The last passenger services operated by the GW panniers were in the Wrexham area supplementing the DMU service to New Brighton at peak holiday times – 4683 and 9669 at the end of May and the same two plus 3729 and 9630 at the August Bank Holiday 1965. The final freight services were operated by the Croes Newydd engines 4646 and 9641 to Brymbo steelworks and the Minerva lead mines and lime works. The last turn was worked by 9641 on 26 November 1966, although the engine had been officially withdrawn at the end of October.

A substantial number stayed in South Wales to the end, with the docks at Swansea, Cardiff, Barry and Newport all retaining a substantial allocation whilst Ebbw Junction and Neath seemed to collect the panniers as they finally ran out of steam. Several collieries in South Wales retained a few under NCB aegis – 3663 at Ogilvie Colliery, then later at Ammanford at the Gwaun-cae-Gurwen opencast site until 1966, as was 3650 before preservation, and 9792 at Maerdy Colliery in the Rhondda Valley as late as 1973. 7714, 7754 and 9600 were also sold to the NCB and were all preserved when their usefulness at the mines was over, 7754 lasting the longest at Mountain Ash Colliery (1975). 9642 was sold as scrap to Hayes of Bridgend but was retained by the scrap dealer in working order for a while to shunt its private siding.

9770, which came to Nine Elms on trial to replace the M7s on empty stock working at Waterloo, seen here at Clapham Junction, c1960. Its successful trial was followed by an allocation of several 46XX until replaced by redundant Standard '3' 2-6-2Ts and '4' 2-6-4Ts in 1963. (G.W. Sharpe)

4698 after out-shopping at Eastleigh Works ready for further duties on the Southern Region alongside another Regional import, an Ivatt 2-6-2T, 1 September 1962. (Bruce Oliver)

4634 shunts empty stock at Clapham Junction, 3 June 1961. (GW Trust)

4634 en route with an empty stock train from Waterloo to Clapham Junction at Vauxhall, 20 June 1959. (R.C. Riley)

A pair of 46XX pannier tanks, 4616 and 4626, banked by another, lift a heavy boat train from Folkestone Harbour to Folkestone Junction,18 May 1961. (GW Trust)

7782 with a train of refrigerated containers at Weymouth, 29 May 1961. (MLS)

4666 on the 5.11pm Wadebridge-Bodmin North, nears Grogley Halt, 27 June 1960. (GW Trust)

4608 draws a freight out of Southall depot towards the main line, 6 May 1964. (Bruce Oliver)

Southall's condenser tank, 9707, at its home depot with a freight, 6 May 1964. (Bruce Oliver)

Five photos of one of the last survivors in neglected condition at Croes Newydd depot on the London Midland Region, shunting and servicing Brymbo steel works, 4 August 1966. (Bruce Oliver)

7754 at Mountain Ash Colliery, 2 July 1971. (John Scott Morgan Collection)

London Transport provided the swan song of the class. As early as 1955, London Transport was searching for shunting engines to replace its elderly steam locomotive fleet. A Great Northern J52, 68862, was tested but was older than the engines the LT sought to replace and was unsatisfactory. A request to the Western Region released 7711 for trials in March 1956 and after modifications to the cab roof to meet clearance restrictions and fitting with LT trip cocks, it was purchased in November for £3,160 and was renumbered L90. 5752 was also bought and became L91. 5786, 7779 and 7752 followed in 1958 as L92-94, and when L90 and L91 needed extensive repairs in 1960, they were replaced by 7760 and 5757. 5764 as L95 and 7741 as L96 followed in 1961 and 7749 and 7739 as L97 and L98 in 1962. Swindon carried out repairs until 1967. Battery cars used in the construction of the Victoria Line were considered as replacements, but the panniers were found to be more reliable. L94 and L95 were overhauled in 1964 and two spare boilers were provided which would see LT through to 1970. However, after work on the battery locomotives, they gradually replaced the panniers with four withdrawn in 1967, two in 1968, two in 1969 and the last three in 1970 (see appendix). L90 (7760) had concerns re boiler and firebox and was withdrawn leaving the two 1964 repaired engines, L94 (7752) and L95 (5764) which was in the best condition. They worked at Neasden and Lillie Bridge and were generally well liked, being 'fit for the job', even if their cabs were more cramped than the LT engines. Several of these engines were subsequently preserved by heritage steam railways. The last three were replaced by new Rolls Royce sentinel diesel engines.

GW pannier 7711, the first pannier tested by London Transport, renumbered L90, at Lillie Bridge, c1957. It was withdrawn when requiring major repairs in 1960 and replaced by 7760. (GW Trust)

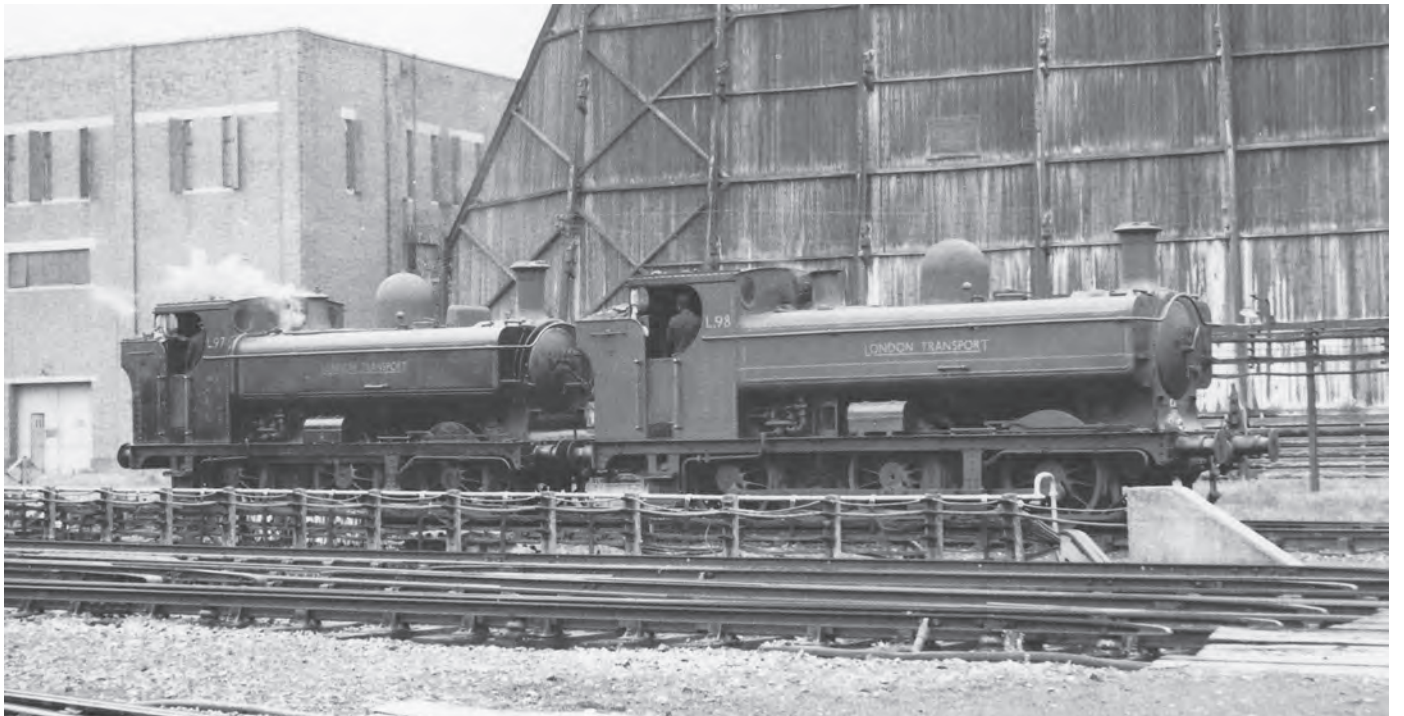

L97 and L98, formerly GW 7749 and 7739 respectively, at Neasden Power Station, c1963. (MLS)

L99 shunting at Neasden Power Station, 15 May 1965. (MLS)

The last steam train on London Transport – L94 (the former GWR 7752) at Barbican, 6 June 1971. (John Scott-Morgan)

Preservation

3650

3650 was built in December 1939 and withdrawn from Neath shed in September 1963, having run 493,000 miles. It was disposed of to Stephenson Clarke, who ran it on their private colliery operations at Gwaun-cae-Gurwen, where it received a blue livery with red lettering. It was purchased by a Great Western Society member in 1969 and initially stored at Hereford before being transferred to Didcot. 3650 was subsequently purchased by GWS volunteer, Brian Thompson, in 1982 and restored over the next twenty odd years by his 'Black Cupboard Gang' of engineering enthusiasts. It was brought into operation in July 2008 in the colliery blue livery for 'running in' purposes, then subsequently repainted in its GWR green livery with the 'shirt button' icon in April 2009. 3650 is currently awaiting its 'ten year' boiler overhaul at Didcot.

3738

3738 was built in September 1937 and withdrawn in August 1965 from Cardiff East Dock depot, having run over half a million miles in traffic. It went to Woodham Bros. in Barry and was bought by two Great Western Society members, was transferred to Didcot and was operational from 1976 to the mid-1980s. After overhaul, it returned to steam in 1995, and again in 2007. It was withdrawn from traffic in July 2013 with firebox problems and is on static display awaiting overhaul.

4612

4612 was built in February 1942 and withdrawn from Cardiff East Dock shed in August 1965, having run 427,707 miles. It went to Woodham Bros. in Barry until rescued in 1981, bought to provide spares for 5775 by the Keighley & Worth Valley Railway. In 1987, it was purchased by Elaine and Ray Treadwell and restored at the Forest of Dean Railway. In 2000, it was purchased by the Bodmin & Wenford Railway and was operational until July 2001. After a 10-year overhaul, it emerged at Bodmin in August 2013, operational in GW green livery.

5764

5764 was built at Swindon in July 1929 and spent its entire life at Old

5764 as restored to GWR livery hauling a heritage passenger train on the Severn Valley Railway at Bridgnorth, 9.6.1974. (John Scott-Morgan)

Oak Common and had amassed 520,259 miles until sold to London Transport in May 1960. It became LT's L95 and had accumulated 668,771 miles when mileage recording ceased in December 1963. It was one of the last three LT panniers, withdrawn in June 1971 and was purchased by the Severn Valley Railway Pannier Tank Fund, transferred to Bridgnorth and entered service in LT maroon livery. It was repainted GW green in 1972 before being withdrawn for repair in 1977. Provided with new wheels, it returned to traffic in 1979 and was withdrawn for overhaul in 1982. It re-entered traffic in 1989, and after its ten years expired, it received a boiler from another pannier and was operational again by 2001. After a further ten years' service, it was withdrawn for overhaul in 2011 and put on display in the 'Engine House' museum. It is currently stored at the Kidderminster Carriage Shed awaiting overhaul.

5775

5775 was built at Swindon in October 1929 and withdrawn from Pontypool Road shed in December 1963. It was purchased by London Transport and renumbered L89, and on withdrawal in January 1970, was sold to the Keighley & Worth Valley Railway where it appeared in a novel 'caramel' livery in the film classic 'The Railway Children'. It was restored in this livery for display at the National Railway Museum before returning to Haworth in 2016.

5775 at Swindon Works just after its last general overhaul and repaint by BR before purchase by LT and subsequent preservation, c1960. (MLS)

5786

5786 was built at Swindon in January 1930 and was withdrawn from Cardiff Canton shed, after many years used as the Cardiff General station pilot and sold to London Transport in April 1958 as L92. It was withdrawn from LT service in 1969 and purchased by the Worcester Locomotive Society and stored at Hereford – when that site closed it was moved on loan to the South Devon Railway. It was repainted GW green but was taken out of service for overhaul in October 2011 and returned into traffic in March 2013 in LT maroon livery as L92 in order to take part in LT's 150th anniversary celebrations. It is currently on the South Devon Railway.

7714

7714 was built in April 1930 and withdrawn from Wrexham in January 1959 after running 520,259 miles in traffic. It was sold to the NCB for operation at Penallte Colliery in the Rhymney Valley. When redundant there, it was purchased by the Severn Valley Pannier Tank Fund in 1973. It was steamed after overhaul in 1992, overhauled again at the Crewe Heritage Centre in 2000, withdrawn in 2009 and after overhaul at Bridgnorth, re-entered traffic, painted BR black in November 2016.

7715

7715 was built in April 1930 and withdrawn from Duffryn Yard in June 1963 when it was sold to London Transport and became L99, withdrawn again in December 1969. It was purchased from LT by the London Railway Preservation Society and certified for main line running on BR. It ran specials over LT metals but was withdrawn when a cracked boiler foundation ring was discovered. It was overhauled in 2003 and repainted GW green,

Preserved 7715, still as L99 on delivery from London Transport to Quainton Road after purchase by the London Railway Preservation Society, 25 May 1970. (John Scott-Morgan)

but failed in December 2005. It was then repaired by South Coast Steam, repainted in LT livery and operated on various heritage lines, returning to Quainton in May 2014, where it is awaiting overhaul.

7752

7752 was built in November 1930 and withdrawn from Tondu in September 1961 when it was sold to London Transport and became L94. It was officially the last pannier to work on LT, being withdrawn in June 1971 after working the last ceremonial steam turn there. It was bought out of service by 7029 Clun Castle Ltd and worked on BR in the early 1970s. Following the most recent repair in 2011, it was certified to mainline standards and repainted in LT maroon livery in 2011. It is currently operational and spent summer 2017 on holiday on the Torbay line.

7754

7754 was built by the North British Locomotive Company in Glasgow in November 1930 and initially allocated to Reading. After thirteen years at Old Oak Common, it moved to Wellington (Shropshire) in 1949 and sold to the NCB in January 1959 and initially used at Talywain Colliery, then subsequently at Mountain Ash, where it operated spasmodically until 1975 – the last pannier in active service outside the heritage engines. NCB painted it blue with red lettering, and on its withdrawal donated it the National Museum of Wales, who loaned it permanently to the Llangollen Railway, now owned by the Llangollen Railway Trust. It was restored to traffic in GW green after a long overhaul

7752, as L94 double-heads 9600 into Birmingham New Street with an enthusiast's excursion, 8 November 2014. (Bob Meanley)

in 1995, had its boiler replaced in 1997 and was then operational until withdrawn for its 10-year overhaul which is currently taking place at Llangollen (October 2017).

7760

7760 was built in December 1930 and was withdrawn from Oxford shed and sold to London Transport as L90 in January 1962. It was one of the last three operating LT panniers tanks, withdrawn in 1971 and bought by the Tyseley based 7029 Clun Castle Ltd., as scrap. Eventually returned to working order in the late 1980s and several overhauls later, it was certified for main line running

7754 was undergoing restoration at the Llangollen Railway workshops in October 2017. The boiler was stripped awaiting attention, whilst the bunker and cab had been repaired and were being repainted in BR black livery, 13 October 2017. (David Maidment)

in 2000 and after expiry of its certification it was briefly offered for sale. It is currently stored awaiting a decision on its future.

9600

9600 was built in March 1945, spent most of its working life at Swindon, and was withdrawn from Ebbw Junction in September 1965, when it was sold to the NCB for use at Merthyr Vale Colliery. It worked there until 1973 when it was bought by 7029 Clun Castle Ltd for spares as it had fallen into very poor condition whilst with the NCB. Eventually overhauled at significant cost, and returned to service in 1996, it gained main line certification in 1999 and received a further boiler overhaul in 2009. It is currently operational at Tyseley.

A pair of Tyseley based panniers including 9600 bank a railway enthusiasts' special train up the Lickey incline, March 2012. (Bob Meanley)

9629

9629 was built in December 1945 and was theoretically withdrawn from Pontypool Road depot (although it appears not to have moved there from its previous allocation at Cardiff) in October 1964, having run 385,188 miles in traffic. After a long sojourn at Woodham Bros. sidings at Barry, it was purchased by the Marriot Hotel company at the behest of one of its directors, Conservative MP and railway enthusiast, Robert Adley, cosmetically restored at Carnforth and placed on a short length of track in front of its Cardiff hotel. After ten years' deterioration in the open, the hotel group donated it in 1995 to a group of enthusiasts from the Pontypool & Blaenavon Railway, the movement being paid for by the group. It is currently owned by the Pontypool & Blaenavon Locomotive Group and is undergoing restoration on the railway, having acquired its original boiler in 2012, with the intention of returning it to operation on the heritage line.

9642

9642 was built in April 1946 and withdrawn from Old Oak Common in November 1964. It was sold to Hayes scrapyard in Bridgend where it was retained to shunt other condemned engines. It was saved by the South Wales Pannier Group in 1968 and steamed in 1969. It was initially moved to the Swansea Valley Railway Society, then in 1994 to the Dean Forest. In 2005, it was bought privately and ran for a while on the Gloucester & Warwickshire Railway, but is currently under a ten-year overhaul by its owner, Andrew Goodman.

9681

9681 was built at Swindon in May 1949 and withdrawn from Cardiff East Dock depot in August 1965, going straight to Woodham Bros. at Barry. It was acquired by the Forest Pannier Tank Fund in 1975 and returned to steam on the Dean Forest Railway in 1984. The locomotive is now owned by the Dean Forest Locomotive Group, a registered charity, and is currently undergoing a scheduled ten-year overhaul and is expected to return to traffic in late 2018.

9682

9682 was built in May 1949 and withdrawn from Radyr in August 1965 after running just over a quarter of a million miles. It was acquired by Woodham Bros. at Barry and bought by the GWR Preservation Group in 1982, restoration starting in 1997 and completed in 2000, when it initially worked on the Swindon & Cricklade Railway followed by a spell at Bodmin. After necessary repairs it operated for a while on the North Norfolk Railway, then returned to Tyseley for further work, after which it spent six years reliably operating on the Chinnor and Princes Risborough Railway, amassing 9,487 miles in traffic. In November 2009, it was moved by road to Southall for its ten-year boiler check and overhaul which is still ongoing.

Personal Reminiscences

My first memories of the pannier tanks go back to my early trainspotting days around 1949-50, when as an eleven-year-old I was allowed to buy a cheap day ticket from Hampton Court to Waterloo and spend the day circulating round the London termini. I always spent the latter part of the morning and lunchtime at Paddington after going to Euston to see the *Royal Scot,* and the first sight to greet me on emerging from the underground onto Paddington's 'lawn' would be a bevy of pannier tanks at the buffer stops, especially one of the '8750' series. I have faded photos of 8754 and 8755 taken with my folding Kodak 'Brownie' camera.

In 1956, whilst on a 'short works course' to investigate the possibility of a railway career, my week at Bath and Bristol included a chaperoned brakevan trip round Bristol Docks hauled by pannier 3623, and when I spent as a result seven months at Old Oak Common between leaving school and starting college in 1957, I was inducted into my first engine maintenance task on a pannier tank (I finished the clerical work I was required to do by lunchtime and was off-loaded onto different fitters in the afternoon). I was instructed to remove the clackbox from one engine and broke a couple of monkey-spanners in the process, the nuts on the clackbox being somewhat worn and recalcitrant. However, I know the engine survived my poor attempts as 5764 now thrives on the Severn Valley Railway.

Between 1957 and 1960, I commuted daily from my Woking home to Waterloo and on to Warren Street as I attended college, and during that time saw the replacement of the Nine Elms M7s that monopolised the Clapham-Waterloo ECS workings by a tranche of pannier tanks, mainly numbered in the 4600 series, after successful trials with 9770. I gather some of the 70A crews complained about the cramped conditions after the spacious cabs of the M7s, but there was no doubt that they were more suited to the work, and departing main line trains with their slithering and slipping Bulleid pacifics got a much bigger 'shove' out of the platform by a barking pannier than they ever did from the less powerful M7s.

In February 1961, I was undertaking a number of footplate and brakevan trips on the North & West intending to write an article for one of the railway magazines and after a superb ride on 4037 from Pontypool Road to Shrewsbury with the 8am Plymouth, I returned to Cardiff with 4086, running 90 minutes late after an overhead wiring problem on the LMR. At Pontypool Road the train split with the 'Castle' continuing with the main train to Bristol while the three coach Cardiff portion was collected by Aberdare's 3655.

The next day I had a brakevan pass on the 11am class 'H' freight from Alexandra Dock Junction to Shrewsbury Coton Hill Yard, behind Ebbw Junction's 3837 with a full load of steel, 17 equal to 57 wagons, weighing approximately 700 tons. We took the Eastern Valley route to Pontypool Road and stopped at Cwmbran to attach 86G's 9797 as banker. We accelerated the load to 15mph past Upper Pontnewydd and held 12mph on the 1 in 51 to Sebastopol, slowing to 5mph past Panteg steelworks, arriving at the top of the incline in eighteen minutes from Cwmbran.

A couple of months later, I spent a Saturday timing the Down and Up *Pembroke Coast Express* and encountered a dispiriting down run in pouring rain behind Landore's 7028 which blew off steam all the way while dropping 17 minutes on the public schedule to Newport (because of the Saturday extra load it had been allowed 15 minutes extra in the WTT – a shocking practice). I relieved my frustration with a trip up to Maesycwmmer on

12.15pm Manchester – Plymouth/Cardiff, 15.2.61
3655 – 86J
3 chs, 102/110 tons

Location	Time	Speed (mph)
Pontypool Road	00.00	
Panteg Junction	05.39	35/ sig stand – signal wire broken at Llantarnam (12.15 Manchester ahead)
	12.30	
Pontnewydd	14.53	46
Llantarnam	18.24	10* signal wire broken, cautioned past signal at danger
Ponthir	20.26	44
Caerleon	22.44	46
St Julian's Bridge	–	pws 25*
Maindee Jn North	26.10	45/34*
Newport High St	29.14	(net time 19 minutes)

a Brecon train behind an Ebbw Junction pannier tank. Despite the typical Welsh downpour, there was no slipping as the game pannier blasted its way up the valley, gaining time in handfuls. Later in the year I tried the *Pembroke Coast Express* again with a similar driver's lethargic response and took the antidote with another pannier which was as energetic as Landore's 5037 was slothful.

did not need the condensing equipment to operate, of course, and performed the first leg of the turn with no fuss. The second trip to Paddington was to take the fourteen or fifteen empty bogie vans up for the 2.34pm Paddington-Plymouth parcels train that was to be berthed in Platform 1A, but while we were standing at Old Oak, having buffered up to and hooked on to the first van, the

came off, and the driver intimated that we'd better go, fireman or no fireman. Time, I thought, to attend to the fire, and got a shock when I opened the firehole door to find the fire had gone out! The driver disappeared and returned with some wood and paraffin and we got it going again, and he then said we'd have to go, fire or no fire, we had just enough steam remaining to keep the brake off. We stopped

3pm (SO) Newport High Street – Brecon to Maesycwmmer

	9664 86A			**9616 86A**		
	3 chs, 94/105 tons			**3 chs, 91/95 tons**		
	22.4.61			**28.10.61**		
Location	**Time**	**Speed**	**Schedule**	**Time**	**Speed**	**Schedule**
Newport High St	00.00		T	00.00		T
Newport West	–			01.16/01.27 sigs		
Gaer Junction	02.27	23	½ L	04.50/6.02 sigs/30		4 L
Park Junction	04.20	20*	¼ L	10.34/11.24 sigs		
Bassaleg Junction	07.00	29½	T	12.14	28	5¼ L
Bassaleg	07.45		¼ E	13.05		5 L
	00.00		¾ E	00.00		4 ½ L
Bassaleg North	–	pws 8*		–		
Rhiwderin	04.12	28/23		03.28	25/32	
Church Road	08.39	35		07.34	34	
Machen	11.45		2 E	10.39		2 L
	00.00		2 E	00.00		2 L
Trethomas	04.56	15* (curve)	2 E	04.41	31/15*/28	1¾ L
	00.00		2½ E	00.00		1½ L
Bedwas	02.33	27/32	3 E	02.44	30	1¼ L
	00.00		2½ E	00.00		1 L
Duffryn Isaf	04.08	28/36		03.52	36/38	
Maesycwmmer	10.04		1½ E	09.36		1½ L

In April 1962, I was training at Old Oak Common, and my required experience included a day on a pannier tank performing ECS duties between Old Oak Common and Paddington. I chose a turn that had a heavy South Wales express to service and found to my surprise one of the 'condenser' panniers, 9709, on the target number. We

driver handed his brass pay check to the fireman and told him to go and collect both their wages. He was gone for an inordinately long time – Thursday lunchtime wages collection was a busy time and queues would form – so the driver turned to me and told me to cover with the shovel. He kept me talking a few more minutes, then the peg

at the foot of the incline at the shed exit and the driver yelled at a mate in the cab of 5021 waiting to go up as a replacement for a failed diesel hydraulic on the *Royal Duchy*. The 'Castle' gave us a hefty shove up to North Pole Junction, then we freewheeled down the other side and luckily we got a clear road to the platform, I just managing

3634 on the 11.15am Newport High Street-Brecon train, taken from the train as it approaches Maesycwmmer, 25 August 1962. (D. Ellis/John Hodge Collection)

to stir the fire into enough life to keep the brakes off. By the time the 2.34 parcels released us, the safety valves were simmering nicely. I was heartedly relieved and impressed with the little engine and the driver said nothing to his mate, when he eventually rejoined us.

Having survived this, I was sent to South Wales for the next year of my training and took advantage of the fact that steam still reigned supreme outside the Cardiff-Swansea mainline. Initially in the Swansea office, I soon discovered the pleasures of an evening excursion on the old Neath & Brecon route, with a two-coach 'B set' and pannier tank sub-shedded at the small Neath N&B depot. 3693, 3766, 4653 or 9792 would forge up the industrial valley as far as Onllwyn Washery and then strike out across the wild moors past Craig-y-Nos, the pannier chattering away with its meagre load containing only the guard, me and a fellow railway enthusiast with whom I lodged. I swear we went faster uphill than descending on the return journey after a quick pint in Brecon.

In December 1962, I was summoned to the office of the District Manager to be instructed to take charge of Pontardawe station in the Swansea Eastern Valley until a 'proper' stationmaster could be appointed, and I found myself in command of five Welshmen, one colliery (Ystradgynlais) and some pit prop sidings where a Swansea Eastern Depot 67XX, usually 6754, would perform the ritual of berthing of twenty empties and draw out the previous day's loading of new pit props bound for other South Wales collieries. With, frankly, little to do, I took the opportunity to accompany 6754 on this chore on several occasions, as well as hitching a lift back to civilisation at the end of the day in the brakevan of the evening coal train from the colliery to Swansea Docks, usually hauled by a pair of the steam braked loose coupled 67XX – I remember 6714 and 6741 on one occasion and the 1950 built 6757 and 6777 were other regulars.

After a spell in the Cardiff Divisional Office in the spring of 1963, I was sent to cover the summer rush as Assistant Terminal Manager at Fishguard Harbour, optimising the loading of the converted car-ferry, the *Saint David*, and liaising with the vet on the condition of Irish cattle received on the night ferry before their fateful last journey to Smithfield. Apart from the daily boat trains, the only way I could get back by rail to Carmarthen and points east was to catch the two coach shuttle between Fishguard and Clarbeston Road which was the exclusive domain of 9602 the whole time I was there. I don't remember timing the train, but I've found a log in the archives of the Railway Performance Society. 9602 left Clarbeston Road with its 65 ton load and had attained 48mph by Wolfs Castle and maintained 40mph on the three mile 1 in 108 up to Welsh Hook Halt before stopping at Mathry Road in just under fifteen minutes for the ten miles. A 100-second signal stop at Letterston Junction was followed by acceleration to 34mph up the sharp 1 in 100 rise to Jordanston Halt, before freewheeling down the 1 in 50 descent to Fishguard & Goodwick station and the final two minute trot over the final mile to the harbour station.

In April 1964 I was appointed to my first substantive job as Stationmaster Aberbeeg in the Western Valley a dozen miles north of Newport. At the junction between the Ebbw Vale and Brynmawr branches, Aberbeeg retained a small steam shed as Ebbw Junction was receiving the new English Electric Type 3s (the class 37s). It housed two Churchward 52XX for unplanned colliery working and a dozen pannier tanks of both 57XX and 94XX types for trip working, yard shunting and banking of the coal and iron ore trains to Ebbw Vale. My main memory of the 57XX was my need to commandeer one of their examples (always a 57XX such as our local 3686, 3772, 4663 or 9682) to man the breakdown train whenever I was called out to one of the all-too-frequent derailments. The shedmaster retired two months before the shed closure in December 1964, so I was asked to look after the depot for that short period and found the 57XX ever reliable – much more so than the Paxman Type 14 diesels (D9501, 9507 etc) which attempted to replace them in early 1965.

Since then, my only contact has been with the many preserved panniers on our heritage railways – only the week before writing this seeing 7714 running up and down Bewdley station providing brakevan trips for young (and old) railway enthusiasts during the 2017 Autumn Severn Valley Railway Steam Gala, while I ran a stand for the Railway Children charity on the opposite platform. I don't remember ever having seen a pannier so spotlessly clean in BR days – it looked quite unnatural!

Models

Mainline model of 5768 of 1981, detailed and repainted by me as 5764. (David Maidment)

I own this kit-built model of Old Oak Common's 8755 in GW green.
(David Maidment)

Hornby model of 8773, detailed and repainted as 9682 in BR black in the form that I knew when it was stationed at Aberbeeg depot in the 1960s, and has since been preserved on the Dean Forest Railway.
(David Maidment)

Chapter 5

THE '54XX', '64XX' & '74XX' CLASSES

'54XX'

The GWR had introduced auto-train working in the first decade of the twentieth century and had used the '2021' class as the basic motive power for such services. Collett was modernising and standardising the myriad classes of saddle and pannier 0-6-0Ts in the 1920s and after the success of the 57XX class, turned to consideration of a similar design for the auto trains. In February 1930, an auto-fitted engine, 2080 was tested with 5ft 2in diameter wheels instead of its small 4ft 1½ in wheels as a precursor to a new design being developed (see photo on page 106). After a couple of months, it was returned to '2021' standard form, and worked on into BR days, but 2062, withdrawn in August 1930, was rebuilt as the prototype and numbered 5400. The auto gear from 2160 was removed and fitted to the new locomotive.

A second-hand Swindon standard No.11 boiler was fitted to 2062's frames, the rebuilt engine had 16½in x 24in cylinders, enlarged bunker holding 3tons 4 cwt of coal and enclosed cab, and the pannier tanks held 1,200 gallons. It weighed 46 tons 14 cwt. A production run,

The rebuilt 2062, numbered 5400, fitted experimentally with 5ft 2in coupled wheels, August 1930. (MLS Collection)

5401-5419, was built in 1931 and 1932, but 5400 was withdrawn and scrapped in June 1932 and a new 5400 built using some of the dismantled parts from the rebuilt 2062. The production engines were fitted with the Standard No.21 boiler. Other dimensions included total heating surface of 1,086sqft, grate area 16.76sqft, boiler pressure 165 lbs psi, and a reduced water capacity of 1,100 gallons bringing the weight down slightly to 46 tons 12 cwt with an axleload of just over 15½ tons. They were fitted with screw reverse appropriate for a pannier designed for passenger train work. Tractive effort was 14,780 lbs. All the engines were auto-fitted with equipment removed from the '2021' class. 5420 – 5424 were added in 1935. All were equipped with the standard GWR ATC.

The initial ten engines were tested throughout the company but the second batch – 5411-19 – all went straight to Southall for use in the West Ealing/Greenford/Ruislip/Uxbridge area. The allocation of the rest settled on the Banbury and Westbury areas. After electrification of the LT lines extended to Ruislip, a number of the London Division engines were reallocated and after nationalisation, taking 1954 as a typical example, there were still eight in the London Division, but six at Westbury, three each at Taunton and Banbury, two each at Gloucester and Oswestry and just one at Carmarthen.

When built, they were painted GW green, and after nationalisation, black, with just one, 5409, given the mixed traffic lining. However, when Swindon started applying the BR lined Brunswick green livery to a number of smaller mixed traffic engines in 1956, at least four 54XX (5409, 5410, 5416 and 5420) got similar treatment.

5402 under construction at Swindon, 1931. (MLS/Bob Miller Collection)

5402 and 5403 at Westbury, in front of a ROD 2-8-0, Westbury, 14 August 1938.
(F.K. Davies/John Hodge Collection)

Banbury's 5419 at Brill with a Banbury-Princes Risborough auto train, June 1935.
(MLS/H.C. Casserley)

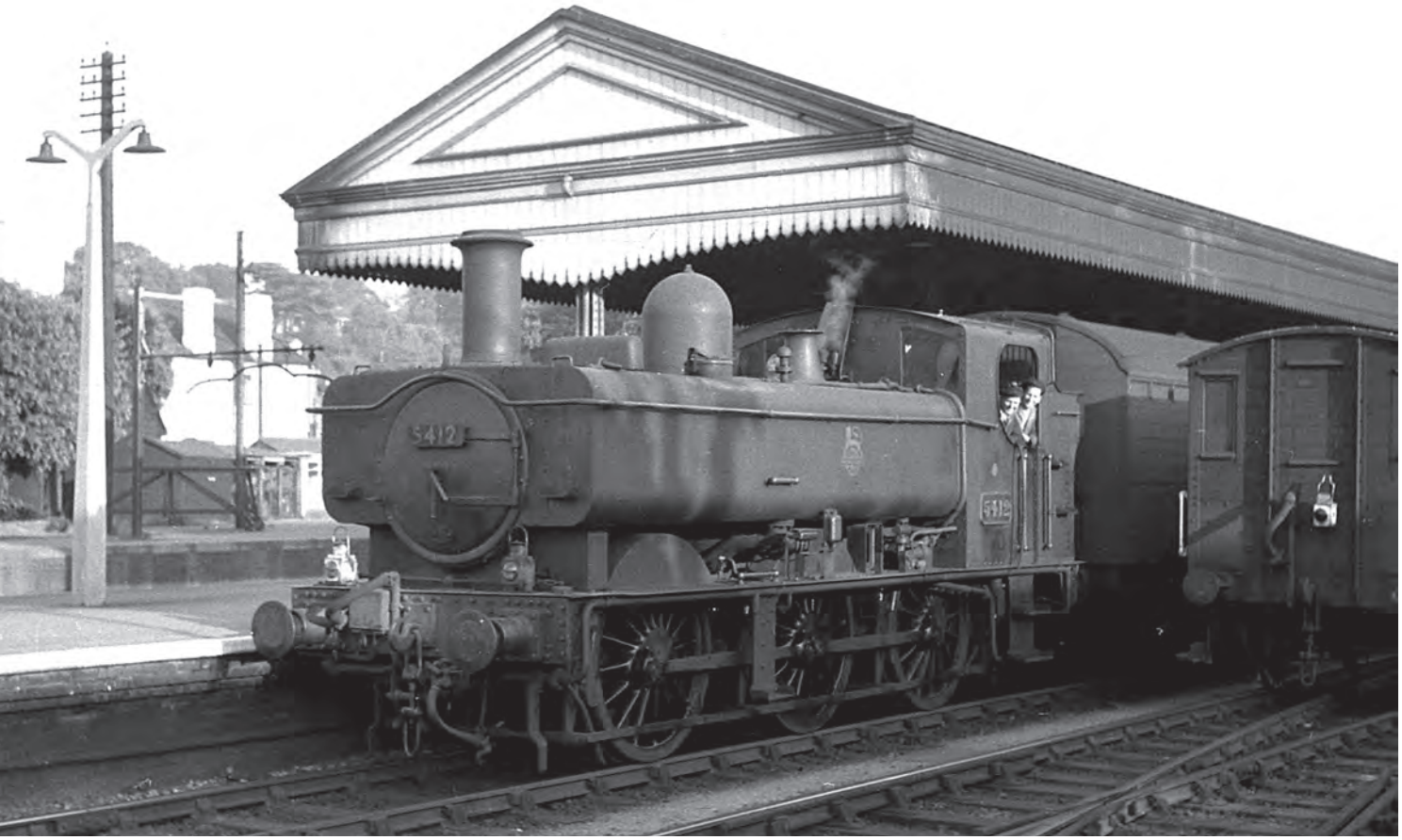

5412 as station pilot at Exeter St David's, c1960.
(Bruce Oliver)

5424 at Princes Risborough with an auto train from Aylesbury, 13 October 1956.
(MLS/N. Harrop)

5413 in BR black livery at Berkeley Road with 2-coach 'B-set' from Lydney, 17 August 1957. (MLS/N. Harrop)

5400 of Oswestry after withdrawal at Swindon awaiting disposal, 26 April 1959. (R.C. Riley)

5416 on Swindon Dump a month after withdrawal from Yeovil Town, 29 September 1963. Traces of its lined green livery can just be observed under the grime. (Bruce Oliver)

Because of their larger wheels and relatively low boiler pressure, their tractive effort barely warranted more than the '1P' classification they received in the BR power categorisation. They were therefore of similar power to the 14XX 0-4-2Ts and less powerful than the smaller wheeled 64XX, and withdrawals started as early as 1956. Most went in 1957 and 1958, but the remaining engines in 1960 were based at Banbury (5407, 5417, 5420), Westbury (5410, 5416), Exeter (5412), Gloucester (5418) and Oswestry (5421, 5422). 5412 survived at Exeter until April 1962 and 5410 and 5416 moved from Westbury to Yeovil Town in March 1963 to replace the M7s on the shuttle service to Yeovil Junction but were unsatisfactory and were replaced by two 14XX and later two 64XX engines.

'64XX'

'2021' class 2062, renumbered as the prototype 5400, had its 5ft 2in wheels replaced by 4ft 7½in wheels in November 1930 as a trial for a proposed 64XX class giving an increased tractive effort of 16,510 lbs. It soon reverted to 5ft 2in, but in 1932 6400-6409 were constructed. Apart from the smaller diameter wheel size, their dimensions were identical to the 54XX. The smaller wheels reduced the weight to 45 tons 12 cwt.

6410-6419 were built in November and December 1934 and another batch of ten, 6420-6429, were constructed in August and September 1935. With their smaller wheels and greater power, they were intended for local branch services in the heavily graded Welsh valleys, and their success prompted further building to the same design in March and April 1937 (6430-6439). 6410-39 were built with GW ATC gear from the start and the first ten were fitted between 1934 and 1936.

6417 after construction at Swindon Works, December 1934. (MLS/Colling Turner)

6424 at Swindon shortly after construction and before delivery to Ebbw Junction depot, September 1935. (MLS)

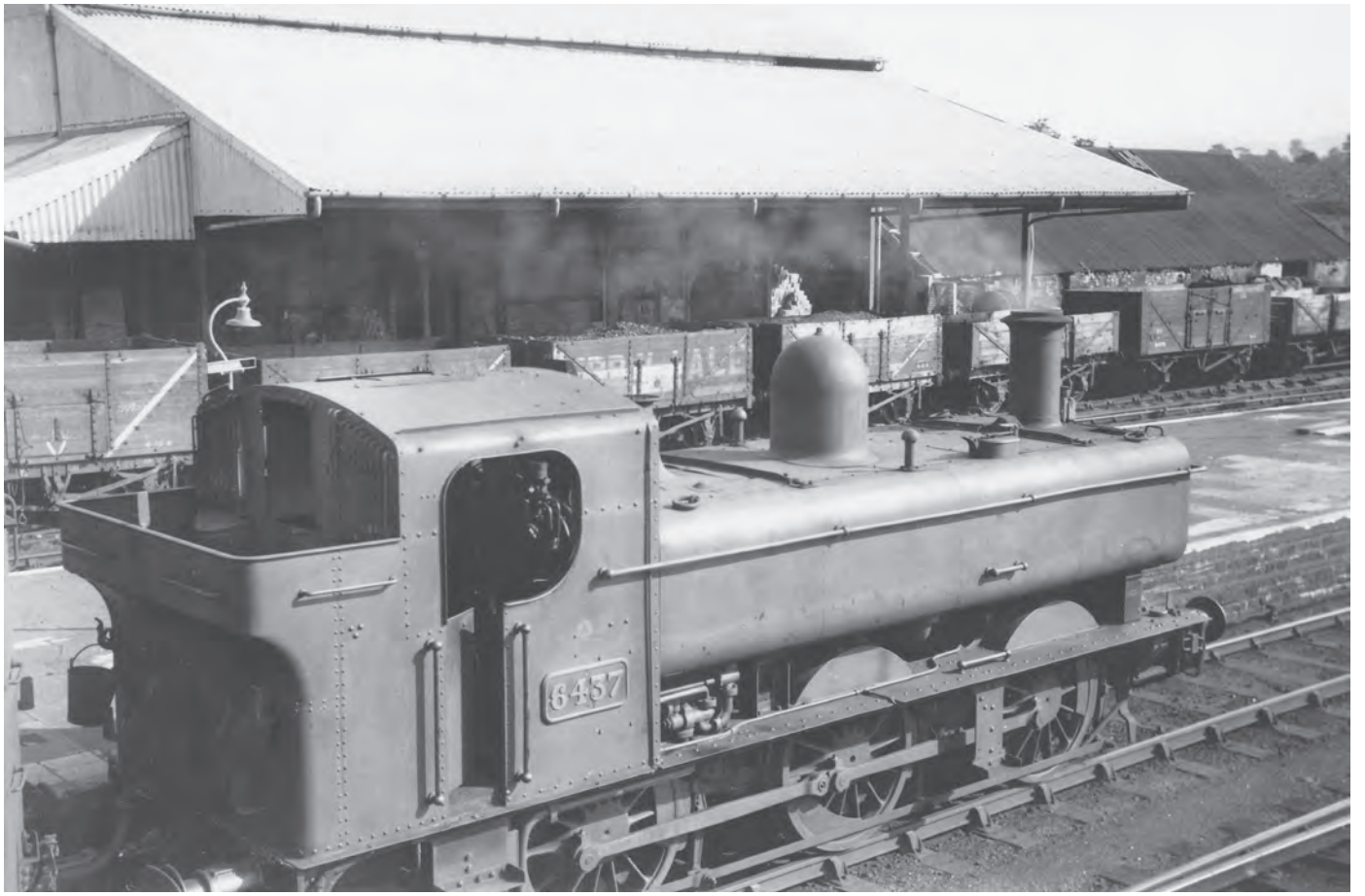

6437 at Hirwaun, 5 October 1950.
(F.K. Davies/John Hodge Collection)

6417 at Fowey with the auto train from Lostwithiel, 7 July 1949.
(C.F.H. Oldham)

6421 with the Saltash auto train at Plymouth North Road, 27 July 1951. (MLS)

6420 at Plymouth North Road with the Saltash auto train, still with GWR clearly on the tank side six years after nationalisation, 31 August 1954. (F.K. Davies/John Hodge Collection)

The prototype, 6400, at Plymouth North Road with the Saltash auto train, c1958. (Bruce Oliver)

6401 leaving Pontypridd with former Clifton Down auto trailer for Ynysybwl, 30 May 1953. (F.K. Davies/ John Hodge Collection)

6438 at Ely with the 12.45pm Cardiff Clarence Road – Pontypridd auto train, 4 April 1953. (S. Rickard/John Hodge Collection)

Twenty-four went initially to South Wales sheds (eight to Cathays, seven to Ebbw Junction and the others to Aberdare, Merthyr, Llantrisant and Pontypool), and nine were allocated to Laira for the Saltash service and branches radiating from Plymouth, with the remainder in small numbers to Stafford Road, Stourbridge and Kidderminster. There were few substantial moves during the following ten years, Abercynon receiving four and Birkenhead two, mainly at the expense of the West Midlands allocations. At the end of their lives, Merthyr, Ebbw Junction, Laira and Stourbridge had the majority with Tondu gaining four, Yeovil Town three, and odd members at Oswestry, Croes Newydd, Lydney and Gloucester.

They were painted in GW green livery and after nationalisation were painted plain black with the lion and wheel emblem and smokebox door numberplate. However, the class was caught up in the decision to repaint Western Region passenger and mixed traffic engines Brunswick green after 1957, 6430 emerging from a Swindon Works overhaul in plain green that year and 6431 appeared in fully lined green the following year. A number subsequently received both the plain and lined green BR livery, including additionally 6403, 6413, 6416, 6418, 6419, 6420, 6421, 6435 and 6437. They were classified '2P' in the BR power category and were withdrawn when replaced by

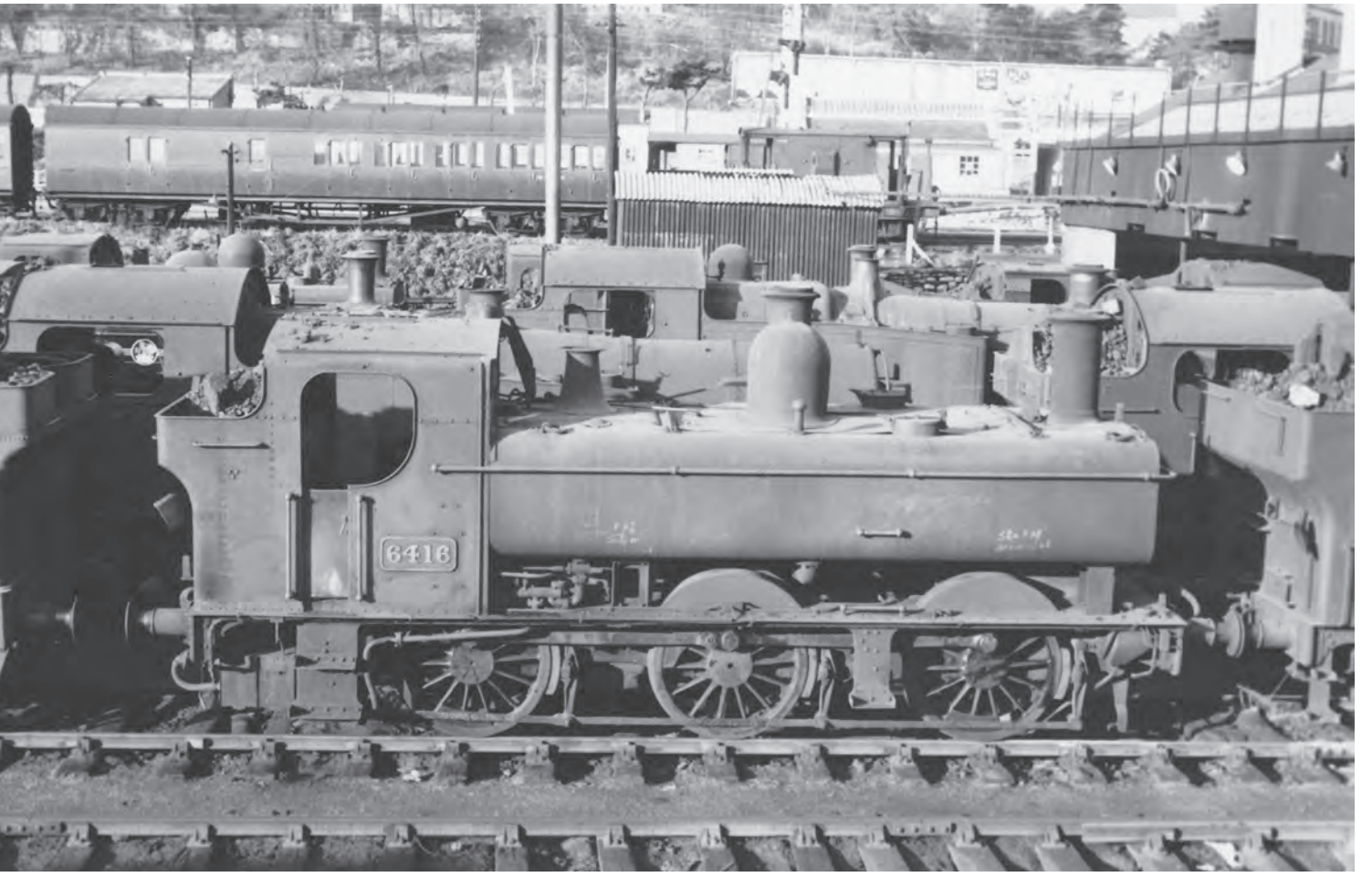

6416 of Cardiff Cathays at Barry after repair, 29 December 1957. (John Hodge)

DMUs (often the single power car of the 550xx series) or withdrawal of passenger services and branch closures. The first three were condemned in August 1958 – 6407 from Laira and 6423 and 6427 from Merthyr – and the last three, all of which were preserved, from Yeovil (6430 and 6435) and Gloucester (6412) in October and November 1964 respectively.

Despite the smaller wheels, the 64XX could be quite speedy, although usually hauling only a single or double auto car formation. Kenneth Cook was present on a trial trip with a new 64XX, which ran very steadily up to 62mph. The Rail Performance Society holds a number of logs, although few include speeds attained as most were on local branch trains with frequent stops – for example, a return trip Pyle to Porthcawl and back in 1963 with 6434 which reached at maximum of 30mph at Nottage, 6438 on the 4.22pm Pontypridd-Ynysybwl with just a single auto trailer and 6411 on the 12.17pm Newport-Pontypridd via Caerphilly. Several logs exist of Newport-Monmouth Troy services, 6417 to Chepstow, and 6426 on 30 December 1958 on the 1.45pm Newport with a two car auto-set, which attained 49mph before Chepstow but logged on to Monmouth. The 1.40pm Newport-Monmouth on 15 November 1958 had 6417 of Ebbw Junction with two coaches, 56 tons, and completed the 32 miles with 18 stops in 72 minutes 44 seconds excluding standing time, averaging 26.2mph, arriving two minutes early. Maximum speeds recorded were 40 mph at Magor, 34 mph after Severn Tunnel Junction, 40mph at Portskewett, 38mph at Llandogo, and 52 mph between Whitebrook and Penallt Halts.

6400 in lined green livery at Laira, 30 August 1961. (R.C. Riley)

6410 at Blaengwynfi bunker first with the 12.40pm to Bridgend, 5 September 1962. (MLS/A.C. Gilbert Collection)

6417 at Tredegar with the 10.25am to Nantybwch, 6 May 1959. (MLS)

6439 at Chepstow with a Newport-Monmouth auto train, 5 July 1958. (F.K. Davies/John Hodge Collection)

6430 at Colyton with the Seaton branch train, 15 July 1963. (R.C. Riley)

6430 at Seaton Junction, 13 July 1963. (R.C. Riley)

Two logs recorded in greater detail are shown below. The first is a journey from Aylesbury to High Wycombe timed by Mr R.A. Knight:

Aylesbury – High Wycombe, between June 1959 & September 1961
1.25pm Aylesbury – High Wycombe
6429 Banbury
1 auto coach, 32 tons

Miles	Location	Times	Speeds	Schedule
0.0	Aylesbury	00.00		T
0.8	South Aylesbury	02.43	32	
4.5	Little Kimble	10.06		1 L
0.0		00.00		
1.5	Monks Risborough	03.39	27/40	1 L
0.0		00.00		
1.3	Princes Risborough	04.30	41/sig stand	1½ L
0.0		00.00		
3.2	Saunderton	06.03	47½ / sigs 30*	1 E
0.0		00.00		
2.7	West Wycombe	04.34	51½ / sigs 25*	
–	H. Wycombe S. S/box	10.56//11.51 sig stand		
4.9	High Wycombe	13.04		5 L

Bachmann model 31-636A, 6422 in BR black livery plus auto-coach, on my model layout. (David Maidment)

The second log is an excerpt from a run between Taunton and Castlecary timed by Peter Semmens in 1948:

Somerton – Castlecary, 9.8.1948
08.45 Taunton – Castlecary
6420 Taunton
1 coach + 1 van, 56 /60 tons

Location	Times	Speed
Somerton	00.00	
MP 126	–	34
MP 125	–	45/50
MP 124	–	53
MP 123	–	51
Charlton Mackrell	04.50	
	00.00	
MP 122	–	33½/42
MP 121	–	46
Keinton Mandeville	05.10	
	00.00	
MP 120	–	35
MP 119	–	48/50 ½
Alford	06.38	
	00.00	
MP 118	–	30
MP 117	–	42
MP 116	–	47
Castlecary	04.00	

I had a number of runs between Yeovil Junction and Yeovil Town behind 6412 and 6435 in March and April 1964 whilst Stationmaster at Gillingham and found both to be competent efficient engines, well-liked by the crews – they had replaced the local M7s. I also have a model of 6422 (a Stafford Road engine that worked auto trains in the Stourbridge/Kidderminster area) with a couple of auto carriages.

Preservation

6412

6412 was built in November 1934 and withdrawn from Gloucester shed in November 1964 (it had worked the final Chalford-Gloucester auto train). After withdrawal, it went to the South Devon Railway working push-pull between Totnes and Buckfastleigh until the mid-1960s with 6430 and 6435. It was transferred to the Paignton-Kingswear line in the early 1970s and sold to the West Somerset Railway in 1976. It was found too small for regular duties there and in 2008 it was sold back to the South Devon Railway. A major overhaul was completed in 2015 and it is currently operational (2017) in BR lined green with the late crest.

6430

6430 was built at Swindon in March 1937 and operated in the Welsh Valleys until 1947. In the following ten years it was based at Pontypool, Ebbw Junction and Severn Tunnel Junction and then moved to Exmouth Junction, finally being withdrawn from Yeovil Town in October 1964. It was sold for scrap to Cashmore's and resold to the Dart Valley Railway in 1966 as spares for 6412. Its remains were purchased in 1990 and moved to the Long Marston MOD site. In 1996, it was purchased by a member of the Llangollen Railway and moved there. Restoration required significant work, some repairs were

6430 operating on the Llangollen Railway at the Autumn Steam Gala, 13 October 2017. It worked the 10.55am with auto trailer to Carrog and is seen at Carrog. There is also a photo of the cab details taken whilst stationary at Carrog. (David Maidment)

carried out on the Severn Valley Railway, and new pannier tanks were fabricated at Llangollen. The boiler was corroded and a new boiler barrel was fitted to the existing smoke- and fire-box. Repairs were successfully completed in December 2003 and it entered traffic in 2004. After a ten-year overhaul, it was operational once more in May 2015 in BR lined green livery with the early 'lion & wheel' crest. It is fitted with auto-train equipment.

6435

6435 was built in April 1937 and, like 6430, was withdrawn from Yeovil Town in October 1964.

The preserved 6435 in GW green livery as built, at Stratford-on-Avon, 24 September 1965. (R.C. Riley)

It was purchased by the Dart Valley Railway and went direct from BR to Buckfastleigh in October 1965 and was used regularly on the South Devon Railway, before transfer in the 1970s to the Paignton-Kingswear Dart Valley Railway. Like 6412, it was found to be too small as loads increased and in 2008 it was purchased by the Bodmin & Wenford Railway. It was finished in the BR lined green livery with late crest, given the name *Ajax*, and was operational from July 2008.

'74XX'

The 74XX class locomotives were a freight version of the 64XX. They had an increased boiler pressure of 180 lbs psi compared to 165, were not auto fitted and had lever instead of screw reverse, more suitable for shunting. There were slight visual differences in the cab design – no front overhang and right-angled join to the bunker rather than a curve. Because of the higher boiler pressure their tractive effort was 18,010 lbs. The first batch of ten were built in July-August 1936 and 7410-19 followed swiftly in December and the first month of 1937. 7420-29 were built in May and June 1937.

The first thirty engines were spread throughout the system with just one or two at a large range of sheds. Goodwick had four and Ebbw Junction had three, but there were just one or two at Didcot, Swindon, Yeovil, Weymouth, Taunton, Laira, Gloucester, Lydney, Stourbridge, Severn Tunnel

7402, brand new and just delivered to Oxford, July 1936. (MLS)

7406, built in August 1936, shortly after delivery to Croes Newydd, c1936. (MLS/Bob Miller Collection)

7407, built in August 1936, ex works after overhaul at Barry, 5 May 1957. (John Hodge)

Junction, Pontypool Road, Duffryn Yard, Carmarthen, Brecon and Aberystwyth. Immediately after the war and at the end of the GWR ownership, the Carmarthen fleet had increased to five, Swindon had three, Oxford had three for the Fairford branch, and Bala had three. Worcester, Whitland, Newton Abbot, Truro and Aberdare had gained an example and Croes Newydd, Goodwick and Duffryn Yard had lost theirs.

Then, surprisingly, after nationalisation a further build was authorised, with 7430-39 being built in 1948 and a final ten, 7440-49, as late as 1950. In 1954, the fifty engines were allocated as follows:

Croes Newydd/Bala	9
Stourbridge	8
Carmarthen	6
Oxford/Fairford	4
Swindon	3
Oswestry	3
Machynlleth/Aberystwyth	3
Hereford/Leominster	3
Weymouth/Harbour	2

The following depots just had one example: Newton Abbot, St Blazey, Truro, Tyseley, Pontypool Road, Aberdare, Neyland, Swansea Paxton Street and Cardiff Cathays.

The Rail Performance Society possesses just one recorded log of a 74XX, 7439 in 1963 on a four-coach Llandeilo-Carmarthen-Llandeilo working. Just one speed was recorded – 46mph between Abergwili and Nantgaredig on the northbound run. I had just two runs behind the class – 7412 in 1956 when I visited the Fairford branch and 7444 in 1963 when it was one of several working out of Carmarthen to Llandeilo and Lampeter.

The first 74XX to be condemned in 1959 were 7401, 7411, 7415, 7416, 7420, and prematurely from the post-nationalisation build, 7438 and 7447. The last survivors in the latter half of 1964 were 7413, 7414, 7418, 7424, 7432, 7443 of Stourbridge and the very last survivors, 7437 and 7439 of Llanelli.

7428 stored at Oswestry after withdrawal – with the GWR lettering still visible – 7 June 1964. (MLS)

7415 at Swindon two months after withdrawal, 26 April 1959. (R.C. Riley)

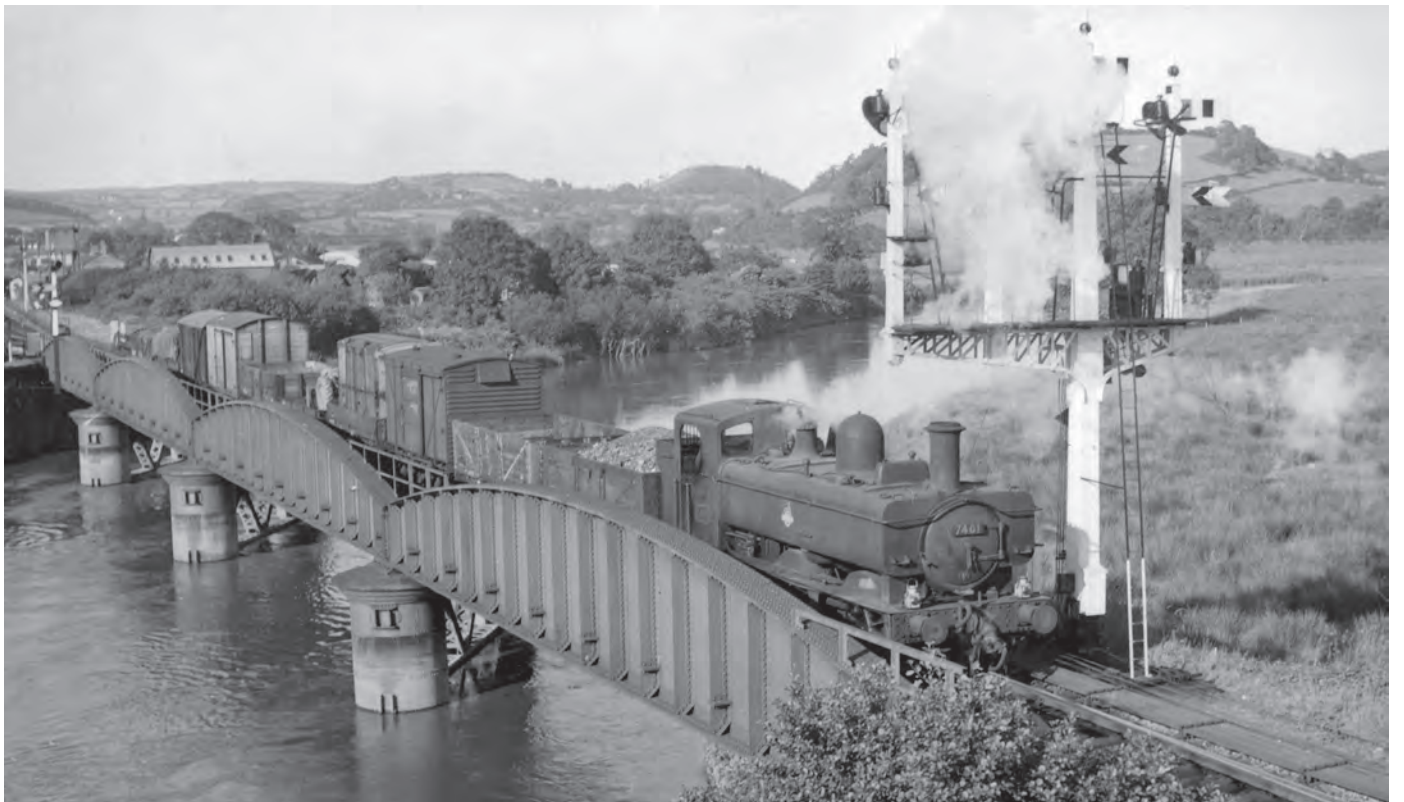

7401 shunts a freight for the Llandeilo/Aberystwyth line over the River Twyi at Carmarthen, 24 June 1955. (F.M. Gates/John Scott-Morgan Collection)

7403 at Bala Junction , 12 July 1958. (MLS)

7436, built in 1948, at Chard taking water ready to depart on the 12.5pm train to Chard Junction and Taunton, 11 May 1959. (MLS)

7431 at Llangollen with the 3.30pm all-stations train from Wrexham to Barmouth, 27 October 1962. (MLS/N. Harrop)

One of Carmarthen's last remaining 74XX, 7439, at Carmarthen with a train for Llandeilo, 7 July 1962. (Bruce Oliver)

7412 at Lechlade on the Oxford – Fairford branch, c1956. (MLS)

7439 at work between Carmarthen and Llandeilo on the last day before closure of the Carmarthen – Aberystwyth line, at Abergwili, 7 September 1963. (W.G. Sumner/ John Hodge Collection)

The very last train, the 6.20pm Llandeilo to Carmarthen, hauled by 7442, at Llandeilo Junction, 7 September 1963. The mayor and other dignatories have turned out for the last rites. (W.G. Sumner/ John Hodge Collection)

Chapter 6

THE '94XX' CLASS

The Great Western Running Superintendent ordered more of the '8750' series of the 57XX panniers in 1946 to follow on from 9661 which was the last of the batch under production. However, the GWR Board demurred and it is rumoured that the General Manager, Sir James Milne, demanded that Hawksworth produce a replacement that looked a little less antiquated, as presumably he was aware of comments made by colleagues seeing the 57XX outside his office on the buffer stops at Paddington at the head of empty coaching stock for such prestige trains as the *Cornish Riviera.* Whatever the reason, Hawksworth designed a taper boilered 0-6-0 pannier tank that was in essence a tank version of Collett's '2251' class of tender 0-6-0s. Below the running plate, the engine was identical to the 57XX. The first ten, 9400-9409, were constructed at Swindon in 1947 and were superheated with the following key dimensions: two inside cylinders, 17½in x 24in, 4ft 7½in diameter coupled wheels, 200 lb psi boiler pressure, total heating surface of 1,245.82sqft, grate area of 17.4sqft, weighing 55 tons 7 cwt with a maximum axleload of 19 tons 5 cwt which barred them from all except 'red' route availability lines. Tractive effort was 22,515 lbs, the same as the 1929 built panniers. The all-welded tanks held 1,300 gallons, an increase of 100 gallons over the 57XX.

Only the first ten were built before nationalisation, but these were followed by substantial orders which were undertaken by private locomotive builders – possibly because Swindon was busy constructing Hawksworth's 'Counties' and 'Modified Halls' and the 70XX series of 'Castles'. It is also possible that politics played a part as there would have been pressure to ensure full employment in the post-war years at many of these northern engineering companies. The Bagnall Company of Stafford built 8400-8449 between 1949 and 1954, the Yorkshire Engine Company constructed 8450-8499 between 1949 and 1952, subcontracting the last twenty to Hudswell Clarke. 9410-9489 were built by Robert Stephenson & Co. between 1950 and 1953, and finally the Yorkshire Engine Company' subcontractors, Hunslet, completed the order

8401 built by Bagnall's delivered new to Swindon for applying BR livery and emblem, July 1949. (MLS)

3401 of the last series built by the Yorkshire Engine Company, just painted after delivery, January 1956. (MLS/B.K.B. Green)

8412 shunting at Truro, 19 April 1952. (MLS)

between 1954 and 1956 with 9490-9499 and 3400-3409. None of the privately built locomotives were superheated and had 1,347.4sqft of heating surface, and all were delivered in BR's plain black livery, unlike the 1947 Swindon built ten which emerged in GW green.

Despite being intended as a more modern successor to the 57XX, they were in fact no more powerful and had some disadvantages, the main one being of their restricted route availability because of their weight. They also incurred criticism from the crews mainly because of the wider cab design which made reaching key controls (especially the brake valve) difficult especially when shunting and required modification. Because of the restriction to main lines and the early difficulties on yard shunting, they were initially used on empty stock working and not just at Paddington. As modifications were made to stifle the criticisms, and the numbers increased, they were to be found throughout the system and often used indiscriminately with the 57XX panniers. Some of the private constructor built engines allocated to Old Oak Common were fitted with special ATC gear with trip cocks for working over LT lines. In fact, the GW Board seems to have had a change of heart in 1948 (perhaps as a result of the early staff reactions) and ordered final batches of 57XX panniers of the '8750' design numbered 9662-9682 and the steam braked 6750-6779, built between 1948 and 1950.

Many were allocated to depots in blocks with 9400-9424 (except 9408) all in the London area and the final ten, 3400-3409, all being allocated to Cardiff East Dock. In 1957 the distribution by Motive Power District was:

Cardiff Valleys	41
Neath	37
London	32
Newport	26
Newton Abbot	22
Worcester	19
Wolverhampton	16
Bristol	10

Seven were transferred to the London Midland Region (8400-8406) for banking duties on the Lickey Incline. 9401 was tested at Stratford for work at Temple Mills Yard but was not considered suitable.

8490 at Duffryn Yard with 'Grange' 6820 and a Churchward 2-8-0T 52XX, 13 May 1962. (MLS/A.W. Martin)

9401 on test at Bethnal Green and Stratford alongside B12/3 61573, 16 February 1957. (R.C. Riley/John Hodge Collection)

9446 at Neath shed with a 38XX 2-8-0, 12 April 1963. (MLS)

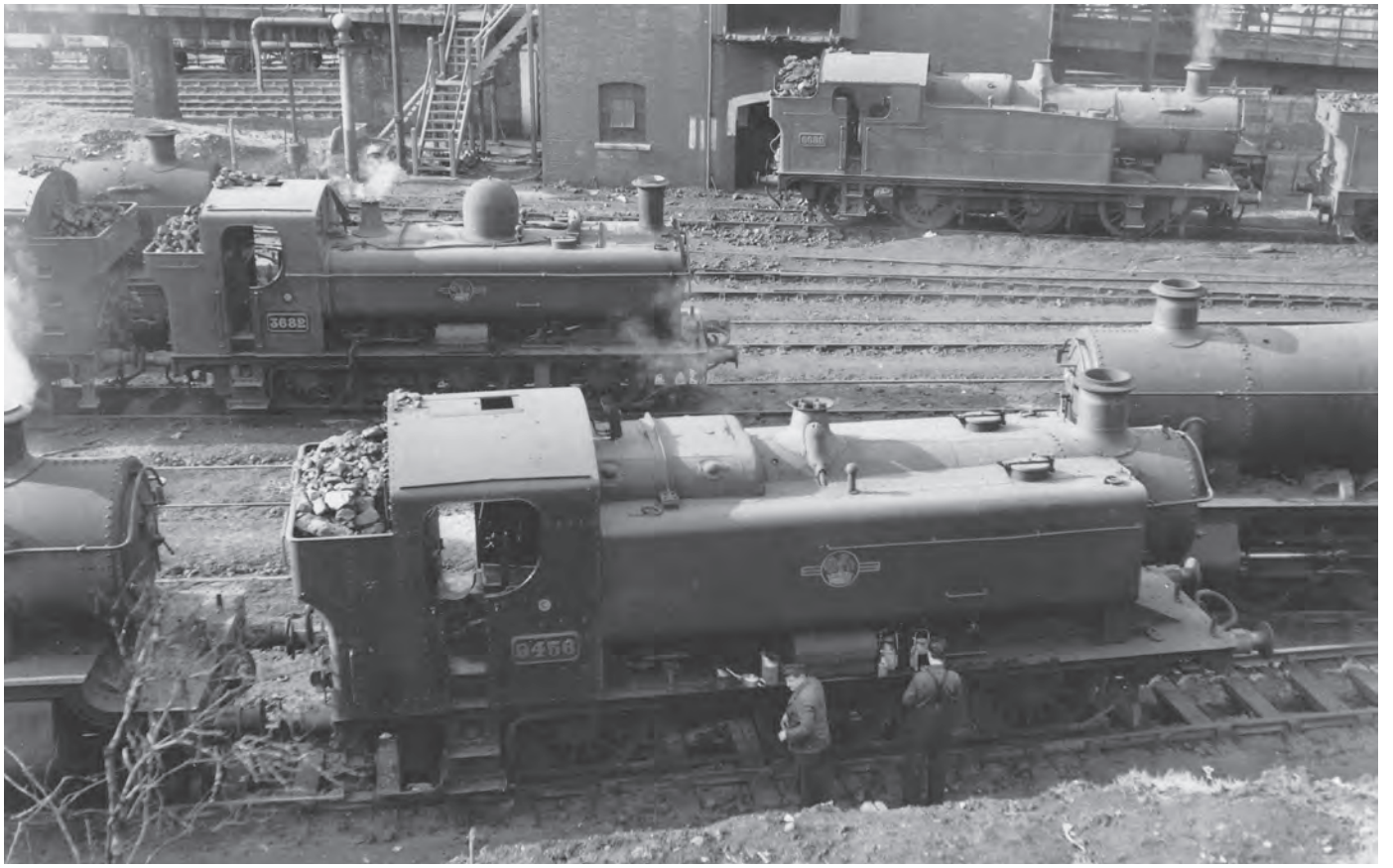

9456 on Duffryn Yard shed with 57XX 3682 and 56XX 0-6-2T 6680, 15 September 1959. (F.K. Davies/John Hodge Collection)

9473 of Neath ex-works at Swindon alongside new 'Western' diesel D10XX and new Hymeks D7037/8 in the background, 17 June 1962. (MLS)

8403 at Swindon Works, 29 September 1963. (Bruce Oliver)

In addition to the empty stock working at Paddington and elsewhere, they were used for heavy shunting at Margam and Llanelli, coal working in the Cardiff Valleys replacing the remaining pre-grouping 'absorbed' 0-6-2Ts, and local passenger services in the Newport District, particularly in the Western Valley to Aberbeeg, Brynmawr and Ebbw Vale, and often the heavy excursion trains from Newport to Barry Island. Few logs have been recorded in the Rail Performance Society archive, but there are one or two of interest. 9485 of Danygraig on a Llandeilo-Llanelli train lost ten minutes in running with a maximum speed of 28mph and then failed, but 9402 of Reading had charge of four coaches and three vans (210/225 tons) on the 8.47am Winchester City-Reading, presumably a replacement after a failure rather than booked working. It left Winchester 4 minutes late and stopped at Micheldever 6½ minutes late without exceeding 32 mph. It did better afterwards, speed rising to 47 mph at Roundwood Box and 52 mph at Worting Junction but arrived at Basingstoke 9¾ late and left 12½ late. It then stopped at Bramley, Mortimer and Reading West achieving 54, 48 and 52mph respectively between stops, but was 15¾ minutes late into Reading General. 9415 of Slough was timed on a three coach snippet between Bourne End and Maidenhead and kept time without exceeding 41mph. Two runs of greater interest are tabulated below:

Wolverhampton-Stourbridge Junction, 5.9.1958
4.50pm Wolverhampton-Worcester
9428 – 84A (Stafford Road)
7 chs, 210/222 tons

Location	Times	Speed	Punctuality
Wolverhampton	00.00		T
Priestfield	03.41		
Bilston West	05.21	30	
Daisy Bank	06.51		
Princes End	08.16	35	
Tipton	09.36		
Dudley	11.46		¼ E
	00.00		T
Blowers Green	05.05		
Round Oak	08.31	35	
Brierley Hill	09.16		
Brettell Lane	10.41	20/sigs 5*	
Stoubridge Junction	18.29		2½ L

Paddington-Maidenhead, 5.3.1959
9.10am PaddingtonBourne End
9463 – 81A (Old Oak Common)
6 chs, 179/190 tons

Location	Times	Speed	Punctuality
Paddington	00.00		¾ L
Westbourne Park	03.07	32	1 L
Old Oak Common E	05.30	44	
Old Oak Common W	06.07	44	
Acton	07.25		
Ealing Broadway	09.15	48	
West Ealing	10.18		
Hanwell	11.19	48	
Southall	15.30	pws 22*	3 ½ L
Hayes	19.40	sigs 41*/47	
West Drayton	23.12		5 L
	00.00		4¾ L
Iver	03.08	43	
Langley	05.06	48	
Dolphin Junction	06.49	49/20* RL	
Slough	09.11		5 L
	00.00		5 L
Burnham	04.47	45	
Taplow	07.25	sigs 25*	
Maidenhead	10.43		4¾ L

A run on the same train with an identical load timed by the same recorder but with more usual power, 2-6-2T 6164, kept time to Southall and with the same checks, was 2½ minutes late at West Drayton and 5 minutes late at Slough also, with similar running from West Drayton onwards.
I cannot trace any recorded runs with higher speeds than the mid-50s, unlike their older 57XX predecessors. Clearly not so many runs have been recorded, their use on passenger services being markedly less as many of the longer branch lines were prohibited to this class. Also, some drivers complained that the 94XX with the larger higher pannier tanks would roll.

Because of their lack of versatility due to axleload, the 94XX class became redundant earlier than the 57XX, and the first withdrawals of this short-lived class were already taking place in 1959, the first being 8417 in March, although it lingered on as a stationary boiler at Aberbeeg shed until the depot's closure at the end of 1964. 8447, built in August 1954, had the shortest life, just four years nine months, being condemned in May 1959. As many as twenty-nine withdrawals took place that year, most of the other engines being just seven or eight years old. Some were sold to the NCB, although scope for that was limited, again because of their weight. Several of the 3400 series, built in 1956, spent time in store, though most of these managed to last until 1964, all at Radyr, to which depot most had been moved in December 1957. 9430 was the last in BR service withdrawn from Bristol Barrow

9497 of Exeter works an empty stock train to Newton Abbot, approaching Teignmouth station, c1953. (MLS)

8409 and 8400 on banking duties on the Lickey Incline, 18 August 1962. (MLS)

Old Oak's 8436 brings the empty stock of an express into Paddington station, 7 June 1962. (MLS/A.C. Gilbert)

Old Oak's 9413 with a long down freight at Greenford, 6 April 1961. (Nick Lera)

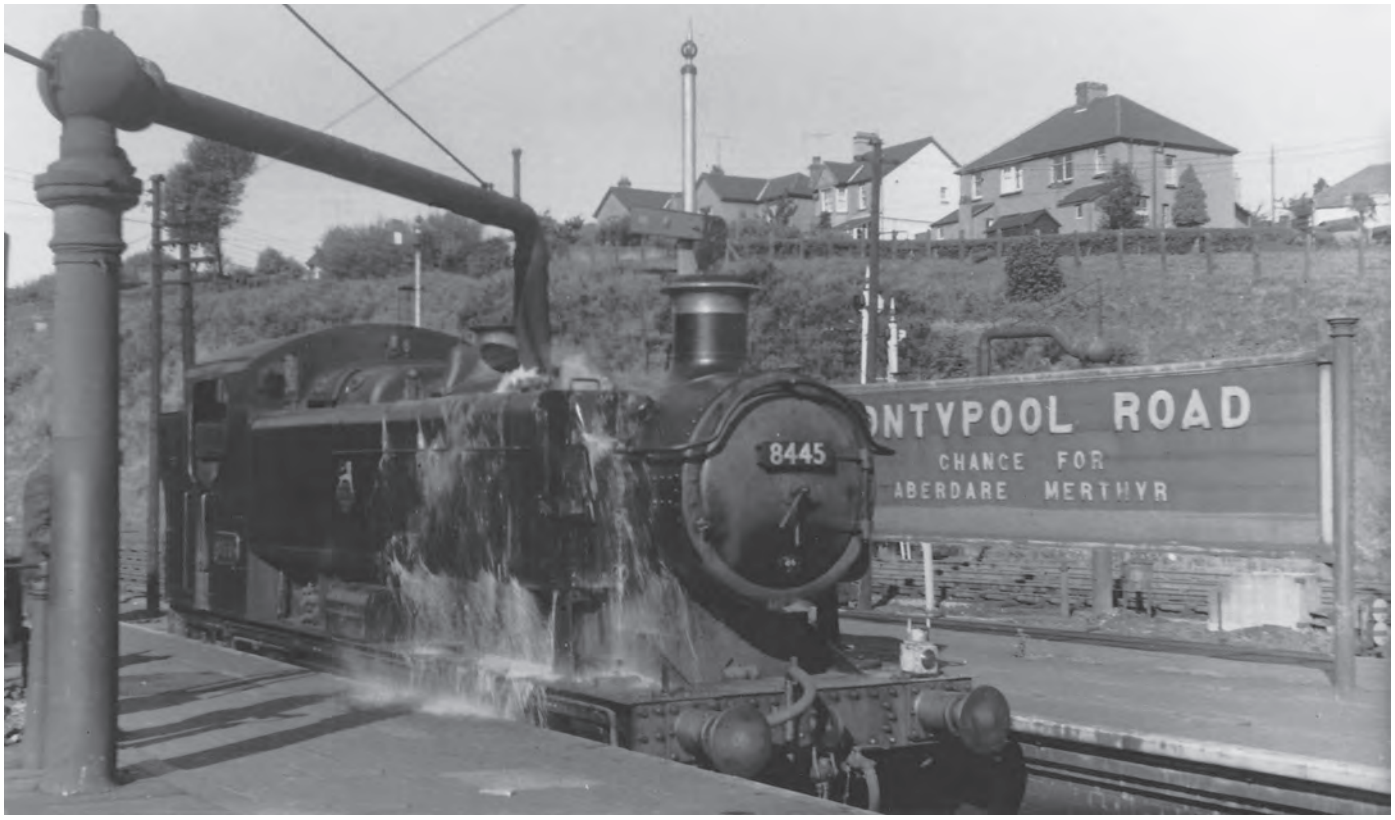

8445 taking water at Pontypool Road station, 23 August 1958. (F.K. Davies/John Hodge Collection)

8495 approaches Cwmbach Halt with a Vale of Neath passenger train, 8 July 1959. (F.K. Davies/John Hodge Collection)

8451 bring empty stock for a Paddington departure at Subway Junction, 19 October 1963. (R.C. Riley)

A row of the 34XX series, including 3405 and 3407, stored at Barry shed, c1960. (John Hodge)

8473 stored at Penzance, 24 September 1960. (R.C. Riley)

8457 being cut up at Swindon, 1961. (Bruce Oliver)

Road in June 1965. Several of the Bromsgrove bankers survived until October 1964, by which time most services were dieselised and did not need a banker. 8403 moved on to Bath Green Park and also survived until June 1965. Two were sold to private companies – 9424 to Adams for shunting at the Gwaun-cae-Gurwen and Glyn Neath opencast sites although it only lasted a year to December 1963, being replaced by a 57XX. 9480, withdrawn in April 1964 was used by contractors to haul the demolition trains lifting the former Rhondda and Swansea Bay lines. 8466 and 8497 acted for a while as stationary boilers at Swindon Works.

8403 and 8401 banking a Bristol-Birmingham express through Bromsgove station and up the Lickey Incline, 18 August 1962. (MLS)

Personal Reminiscences

I'd come across the Old Oak 9400s during my years as a young teenage trainspotter on my school holiday day trips to London. Once I'd bought a cheap camera – a folding Kodak fixed aperture (f8) and speed(1/25 sec) – I took photos of standing Kings, Castles, Duchesses and A4s, but rarely bothered with the pannier tanks, Fairburn 2-6-4Ts or N2s that brought every empty stock into or out of the termini. Eventually, I became more ambitious and attempted moving trains, not too successfully, so I turned to the slow moving panniers barking up those last few yards under the Bishops Bridge Road squealing round the curve and into platforms 2 or 3 to the Paddington buffer stops. I have one photo of 9412 which was actually sharp enough to enter into my school Railway Club's annual photographic competition – though it didn't win. Then on our family's summer holiday in South Devon the same year (1953) I accidentally took a photo of 9440 at Newton Abbot – the main subjects of the photo were a 'Modified Hall' and an 'ROD' 2-8-0 but somehow the Hawksworth pannier tank crept into the picture as well.

On 23 March 1960, after a run to Birmingham on a two-hour train from Paddington behind 6018, I'd taken a Midland train to Cheltenham and back behind 'Jubilees'. The return journey was on the *Devonian,* a nine coach 315 ton gross train headed by 45576 *Bombay* of Sheffield Canklow. The 'Jubilee' struggled, barely keeping the schedule without any slacks, showing signs of shortage of steam like a number of my 'Jubilee' runs, but it was assisted up the Lickey Incline by 8403 and 8405. From a standing start at Bromsgrove it passed the station in 1 minute 3 seconds at 25mph, and fell to 21/20 mph sustained on the bank, then just accelerating to 25mph near the summit passing Blackwell in 7 minutes 21 seconds from the point where the bankers were attached. My notes say that most of the work was done by the bankers (I was in the front coach and realised the 'Jubilee' driver was taking it easy while the fireman furiously worked to raise more steam).

In the autumn of 1962 during my railway management training in the Western Region's Swansea District, I was in lodgings in Swansea and a fellow trainee and I made many evening excursions to Carmarthen

or Llanelli, returning on the 6.50pm Neyland-Paddington sleeping car train, which was invariably hauled by a Carmarthen based 'Castle', usually 5039 *Rhuddlan Castle.* On almost every occasion, the twelve coach heavy train (450 tons gross) was banked up the 1 in 50 grade from Gowerton to Cockett by Llanelli's 9408 – I counted ten runs when we were assisted by 9408 – on only one occasion was a different banker noted. Speeds at the summit ranged from around 22 mph to 28mph, and mainly depended on the vigour of the train engine, as the banker would be working virtually flat out throughout.

In the early part of 1963, I had many evening excursions with the same fellow trainee, now in the Cardiff Divisional Office, to Pontypool Road and trips over the Vale of Neath thence to Aberdare or even through to Neath and back along the main line. We had 57XX panniers, an occasional 56XX 0-6-2T and once Aberdare's solitary mogul, 6361, but the most frequent power on our three coach trains were the Hawksworth 94XX – we had 8488, 9446 and 9475 twice each and 8495 once. I have to say that despite my veiled criticism elsewhere, they performed efficiently enough although there was no real opportunity for speed. Energetic climbing would ensure good timekeeping.

Then, still in South Wales, in April 1964 I was appointed Stationmaster Aberbeeg and found myself in charge of seventy staff and coal and steel train working between Crumlin, Ebbw Vale and Brynmawr. I understood from my predecessor that the Hawksworth 94XX were the usual power for the lighter passenger trains before their withdrawal in 1962, with an occasional incursion of a 57XX or a 56XX on heavier trains or excursions to Barry Island. I remember in particular 8493 and 9494, both of which I commandeered during emergencies to set up single line working. For the last couple of months of its existence I acted as shedmaster of Aberbeeg depot with its dozen pannier tanks which included several 94XX, although our stars were two Churchward 2-8-0Ts 5214 and 5218. The 94XX were

9408 at Cardiff Canton shed ex-works on its way back to Llanelli shed, where it was a regular banker on the 1 in 50 climb through Gowerton to Cockett summit, 28 May 1961. (MLS)

My own Lima model of 94XX class which I repainted in 1981 as Old Oak's 9410. (David Maidment)

mainly used for banking coal and steel trains from Aberbeeg to Ebbw Vale, when I was not using them to rescue our frequent mishaps. Most of the train working by 1964 was undertaken by the new and very reliable English Electric Type 3 diesels (class 37).

The last memory I have which is etched on my brain is the sight of 9494 rounding the curve at the north end of Aberbeeg station with a load of empty mineral wagons for stabling in Aberbeeg Yard at midday on a Saturday at the end of 1964. It was our last scheduled steam turn and the local newspaper's photographer had turned out. As the train passed over the little bridge, 9494 jumped the rails – all six wheels – and came hammering through the station striking the edge coping stones of the platform and flinging them to one side like a series of frisbie throws. The din was horrendous and the photographer panicked and fled, thus missing his scoop. For some miraculous reason the wagons remained on the rails and the yard inspector fetched a ramp, we stacked some timber under the pannier's wheels and after a couple of attempts drove the engine back onto the rails. There was no way we were waiting for the Ebbw Junction breakdown train at midday on a Saturday when Newport County was playing at home.

9400 being prepared for preservation at Swindon Works after two years' storage, 1962. 3440 *City of Truro* is being repaired and restored in the background. (Bruce Oliver)

9466, repainted GW green with Metropolitan Railway 0-4-4T No.1 at Amersham during an LT steam event, 28 July 1990. (MLS)

Preservation

9400

The precursor, 9400, built by the GWR at Swindon in February 1947, was withdrawn from Old Oak Common in December 1959 and was in store at Swindon for over two years until May 1962, when it was surprisingly selected for the Swindon museum rather than a more typical 57XX pannier tank though many of the latter are in private ownership and heritage railway use. 9400 was finished in GWR green as built in 1947 and moved to the present STEAM Museum in Swindon where it is exhibited in cosmetic restoration only.

9466

9466 was built by Robert Stephenson & Co. in February 1952 and withdrawn from Radyr in July 1964.

It spent a number of years at Woodham Bros. at Barry before being rescued in 1975 and bought by Dennis Howells in 1977 and restored over eight years at the Buckingham Rail Centre (Quainton Road) by Dennis and his team. It has appeared in both GW green and BR black livery and has featured in many loans to various heritage railway events including a loan to the Mid-Norfolk Railway and appearance at the London Transport steam event between Rickmansworth and Aylesbury. It is currently operational in BR black livery.

Chapter 7

THE '15XX' CLASS

Hawksworth continued Collett's practice of replacing the pre-grouping 0-6-0PTs and STs with modern equivalents, little altered in principle, although there were some breaks with the Dean/Churchward tradition in this case. The intention was the replacement of the Dean '850' class and the later '2021s' which had 4ft 1½in diameter wheels and a short wheelbase, suitable for sidings with sharp curvature. However, Hawksworth was aware of the need for both austerity and greater accessibility in the immediate post-war period, and possibly influenced by the USA 0-6-0Ts shipped over during the war, he designed a pannier tank without running plate with use of welded fabrication. The other novelty (for the GWR) was the use of outside cylinders with Walschaerts valve gear. The same boiler was used as on the 94XX.

1500 appeared in June 1949, built in the BR period though designed prior to nationalisation, and had the Swindon Standard No. 10 boiler pressed at 200 lbs psi, 17½in x 24in cylinders, total heating surface of 1,347.4sqft, grate area of 17.4sqft, and weighed a heavy 58 tons 4 cwt, with a maximum axleload of 19 tons 14 cwt. This precluded it from some of the restricted dock areas, though it was suitable for heavy shunting in main marshalling yards and carriage sidings. The pannier tanks held 1,350 gallons and the bunker 3¼ tons of coal. It was in the same power category as the 57XX and 94XX pannier tanks, rated '4F' under the BR power categorisation, with a tractive effort of 22,515 lbs. It could negotiate curves of 3½ chain radius (3 chains at slow speed).

A further nine followed (1501-9) between July and September 1949 and 1500-1505 went immediately to Old Oak Common for carriage shunting, ECS and carriage heating, working to and from Paddington. It may have been originally envisaged that they would shunt Acton Yard, but by the early 1950s those duties were covered by the WR precursors of the 08 diesel shunter. Although most received the BR plain black goods livery, 1503, 1504 and 1505 were painted in the BR mixed traffic LNWR lined livery, presumably as they were seen in the public arena at Paddington station (similarly to some of the '8750' series of Old

1500 taking water with a 94XX outside the Factory at Old Oak Common, 16 October 1960. (MLS/A.C. Gilbert Collection)

1507 originally allocated to Newport Pill at that depot 12 July 1959, before reallocation to Old Oak Common. (Cliff Woodhead/John Hodge Collection)

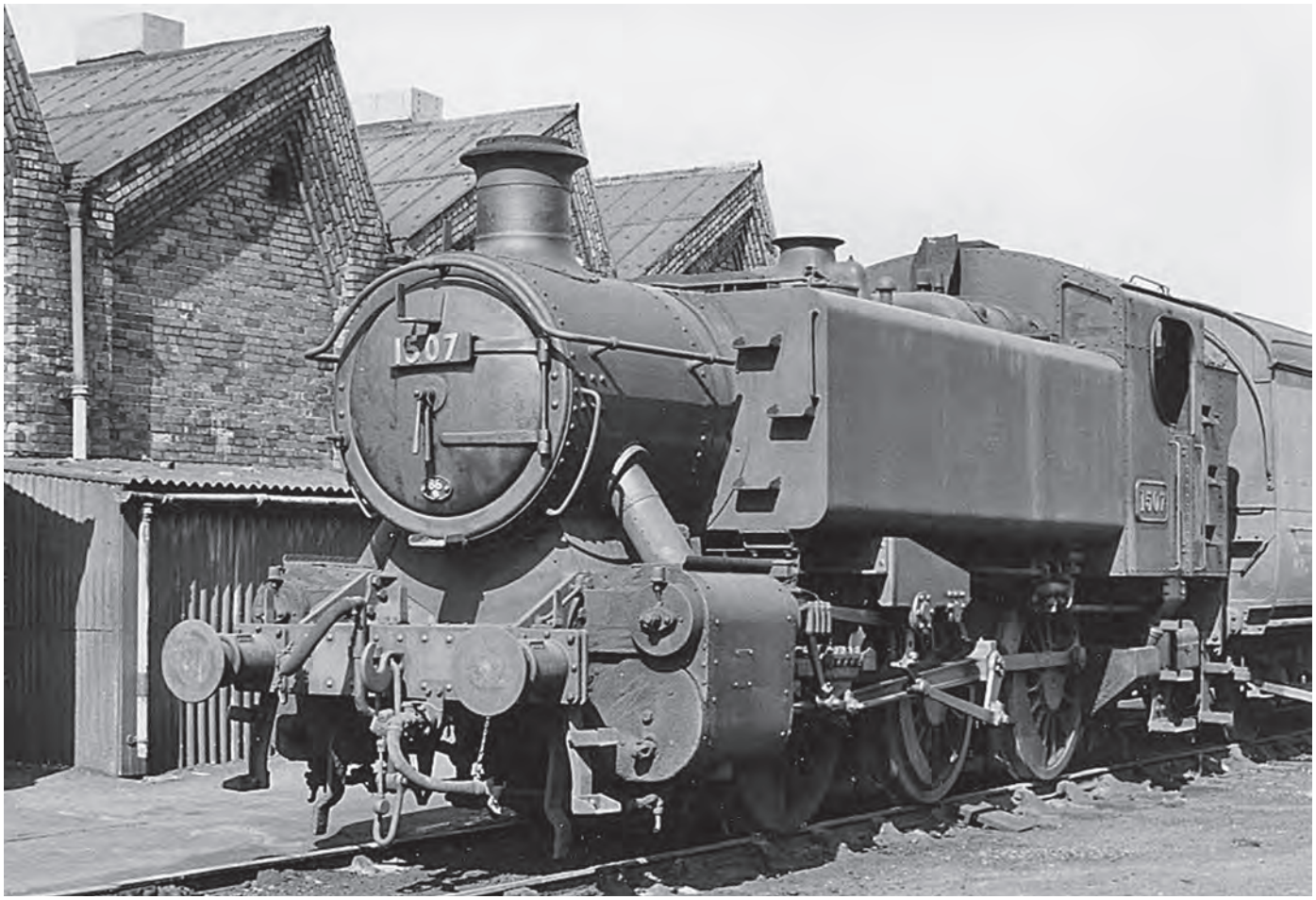

Ebbw Junction's 1506 returning bunker first through Newport with a trip freight from East Usk Yard, 20 March 1957. (John Hodge)

The Canton shed pilot, 1508, behind the coal stage at the depot, 7 February 1959. (John Hodge)

1508 at Canton shed, 30 August 1959. (MLS)

1509 returning from shunting duties at East Usk Yard, light engine to Ebbw Junction shed, 30 May 1959. (John Hodge)

1506 ex works at Caerphilly in the company of ex-works 4-6-0s, before its transfer to Old Oak Common, November 1961. (John Hodge)

1507 sandwiched between 7008 *Swansea Castle* and an '8750' class pannier tank waiting its turn at Old Oak Common's coal stage, 1963. (MLS/P.H. Groom)

1507 drawing empty stock out of platform 9 at Paddington station, 24 May 1963. (MLS)

1506 passing Paddington Goods and approaching Westbourne Park with empty stock bound for Old Oak Common Carriage Shed, 19 October 1963. (R.C. Riley)

Oak based panniers). 1503 and 1504 were returned to plain black later, though 1505 kept its lining. 1501 and 1502 subsequently moved to Southall and Didcot respectively for heavy shunting at those locations and whilst 1501 was mainly employed shunting, 1502 could be seen working heavy freights in the Didcot/Oxford area. 1506-1509 went to South Wales, initially to Newport Pill, though 1506 and 1507 returned to Old Oak Common's carriage working later, replacing 1505 and other panniers which had been withdrawn and remained after the main line services were almost entirely diesel hauled. 1509 stayed at Newport (Pill, then Ebbw Junction) whilst 1508 worked at Severn Tunnel Junction before transfer to Cardiff Canton, where it served as a shed pilot for several years until its withdrawal in September 1962.

1505 was withdrawn in May 1962 and 1508 in September. The other Old Oak engines lasted until 1963, 1504 being condemned in May, 1500, 1506 and 1507 in December with the last, 1503 just making 1964. The Old Oak engines ran between 150,000 and 175,000 miles, although the two transferred from South Wales both exceeded 215,000 – despite their work being mainly shunting, they must have engaged

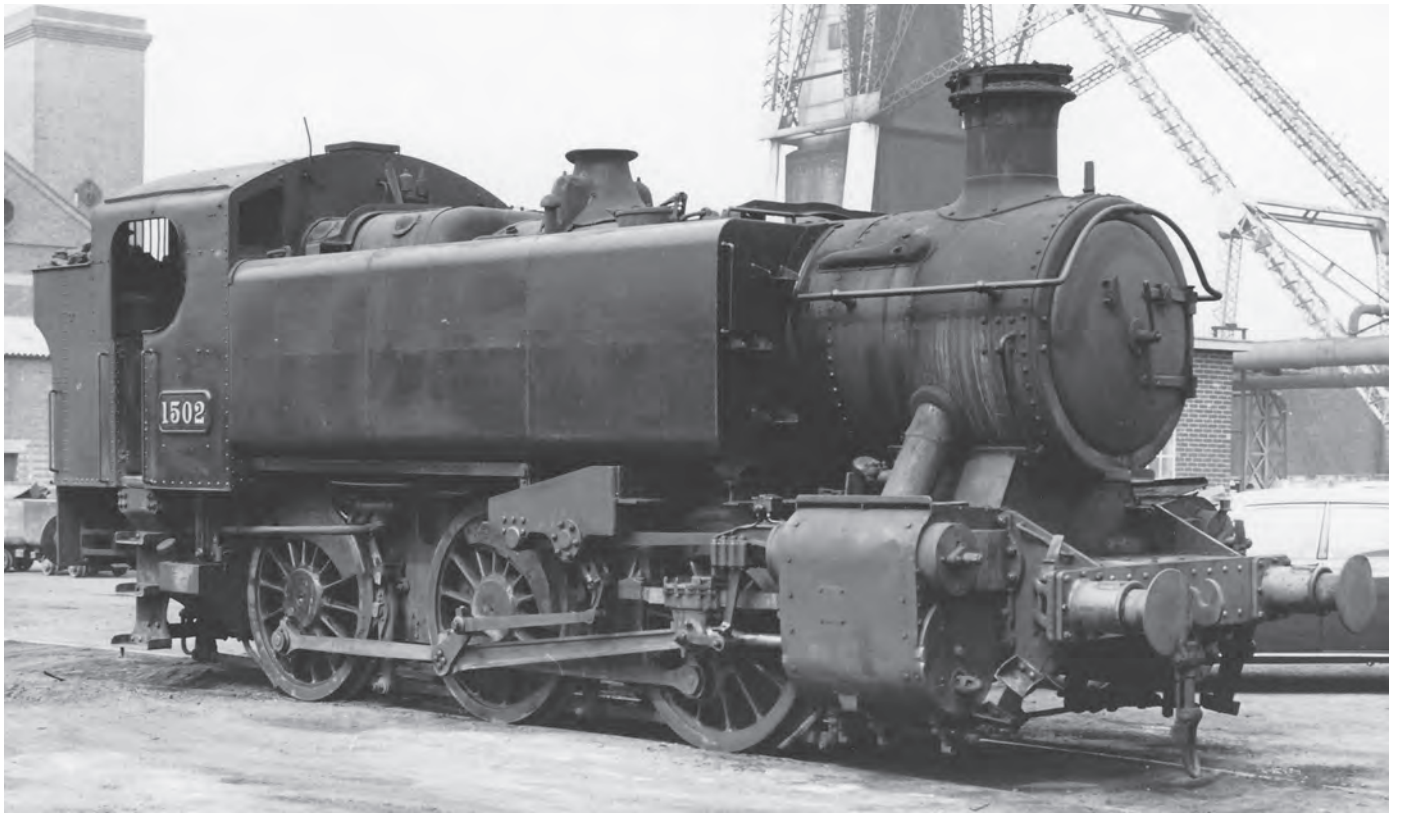

1502 at Coventry Colliery, still active at the end of BR steam, 6 July 1968. (MLS)

1501 in NCB maroon livery at Coventry Colliery, 5 March 1967. (R.C. Riley)

in frequent local goods working unless the Welsh clerks were using a different measuring system! 1502 at 145,000 was the lowest, whilst Newport's 1509, despite being withdrawn in August 1959 and then being sold, was the highest at over 239,000.

Being modern engines able to work on short radius curves, they were attractive to the NCB as long as the colliery sidings could take their weight. 1501, 1502 and 1509 were all sold to the NCB in January 1961 and worked at Coventry Colliery, where they were fitted with wire net spark arresters and were repainted maroon though retaining the BR identity brass numberplates. They were taken out of the NCB's active service in 1969.

Personal Reminiscences

I came across the 1500s on my very first trainspotting day trip to London accompanied by a twelve year old friend in 1950. Cedric had a Box Brownie camera and took four photos that May day, one of which was a rather distant and skewed photo of 1504 pulling empty stock out of No.8 platform at Paddington. What possessed him to take that photo rather than the shiny 'King' on the *Cornish Riviera* we'd just seen, I have no idea. However, looking back at my early photos of Kings, Castles and an occasional Hall, it's a pity that at the time I took so little notice of the 'lesser breeds'.

I made further acquaintance with the 1500s during my 'gap year' spent at Old Oak Common in 1957. Indeed, my most vivid memory is of 1504 again, only this time I was on its footplate at the head of an empty stock train from Paddington to Old Oak Common. I'd been instructed to collect the Old Oak wages safe made up at Paddington and delivered to platform 8 by two staff who helped me heave it into the cab of 1504, to take to the shed, as it was deemed safer that way than by road. The following week I performed a similar role with 1507, but it was so cramped in that small space that thereafter I sought the cab of a larger engine and my future wages runs were performed on engines like 4098 *Kidwelly Castle* off the *Torbay Express* and 5082 *Swordfish* which was Old Oak's regular engine on the *Cambrian Coast Express* at the time.

I have to say that the crews made no complaint about the 1500s – only my attempt to commandeer their limited space with my large and heavy safe. However, they didn't complain too much – after all, it did contain their weekly wage.

Preservation

1501

1501 was built at Swindon in 1949 and initially allocated to Old Oak Common but was moved the following year to

1501 running brakevan trips for enthusiasts at Bewdley station on the Severn Valley Railway at its Autumn Steam Gala event, 23 September 2017. (David Maidment)

Southall where it was active until withdrawal in January 1961. In February it was sold to the NCB and after overhaul at Andrew Barclay's works in Kilmarnock, and painted maroon, it operated at Coventry Colliery and the two mile siding to BR at Three Spires Junction. It was made redundant in September 1969 and was bought by the Warwickshire Railway Society and moved to the Severn Valley Railway at Bewdley in July 1970. Restoration at Bridgnorth and Bewdley took place slowly and the engine was eventually steamed in May 1997 and operated in traffic on the SVR for ten years. It was overhauled between 2009 and 2012, repainted BR mixed traffic lined black livery (as its sisters 1503-5 at Old Oak Common were) and is currently in traffic on the SVR owned by the 15XX Pannier Tank Trust and supported by the 1501 Pannier Tank Association.

1501 resting between duties at Bewdley station at the Severn Valley Railway Autumn Steam Gala, 23 September 2017. 1501 has been repainted in the BR lined black mixed traffic livery as worn by 1503, 1504 and 1505 in the late 1950s. (David Maidment)

Chapter 8

THE '16XX' CLASS

Hawksworth continued his replacement of life-expired pre-grouping 0-6-0 pannier and saddle tanks with the '1600' class, a direct substitution for the '2021' class which were distinguished by having small diameter 4ft 1½in coupled wheels. With the lack of maintenance during the war, as Swindon Works undertook munitions manufacture, the older pannier tanks had suffered neglect and as a result, the GWR found itself short of engines suitable for light branch work, both passenger and goods.

Designed at the end of the GWR era, but not constructed until 1949, 1600 had two 16½ in x 24in inside cylinders, 165lb psi boiler, heating surface of 956.7sqft, and a grate area of 14.9sqft. With water tank capacity of 875 gallons and a bunker holding just 2½ tons of coal, this was indeed a lightweight pannier at just 41 tons 12 cwt and maximum axleload of 13 tons 18 cwt which allowed it a widespread route availability over many of the coal sidings and branches in South Wales where the '2021' class and even older pannier tanks had reigned supreme.

1600 after withdrawal at Swindon Works, 26 April 1959, and just before being sold to the NCB at Risca Colliery. (R.C. Riley)

1600-1619 were built between October and December 1949, and 1620-1629 in 1950. 1630-1649 followed in 1951 and then there was a gap until the end of 1954 when, surprisingly, Swindon was allowed to build twenty more, 1650-1669, amid the construction work of the new Standard '3' 2-6-0s and 2-6-2Ts. They were all introduced in the BR plain black livery with lion and wheel emblems on the tank sides and smokebox door numberplates and were classified '2F' rather than '2MT' despite their frequent use on branch passenger services. Four were fitted with spark arresting chimneys (1616, 1623, 1629 and 1661). They were also constructed to a restricted loading gauge to permit them to work on lines with tight clearances such as the former Burry Port & Gwendraeth Valley light railway – they were 'uncoloured' in the GW route availability classification, which meant that there were no route restrictions at all.

Most of the new engines were allocated to depots in South Wales, with a large number (ultimately eleven) based at Llanelli, and a significant number also at Lydney for freight and passenger work in the Forest of Dean. Some were at Whitland for branch work in West Wales, including the Cardigan branch. Others were in 'penny numbers' at locations like St Blazey (for the Goonbarrow branch), Danygraig and Swansea East Dock for dock shunting and trip work and at Barry also where they replaced a couple of '850' class survivors on Ships Stores trips and access to the lighthouse at Barry Pier. Just one, 1605, went to the London Division, to Southall, for the very specific task of replacing saddle tank 1925 for access to factory private sidings in the Hayes and West Drayton area.

1621, initially allocated to Birkenhead when new in July 1950, at Stourbridge, 1952. It was withdrawn in January 1963. (MLS)

Brand new 1662 at Swindon alongside ex-works 'Castle' 5080 *Defiant*, March 1955. It was withdrawn from Hereford in December 1963. (MLS)

1661, built in March 1955, fitted with a spark arrester for working in the Worcester Vinegar sidings, withdrawn in July 1964 and sold. (MLS)

1618 at Burry Port with the 5.20pm to Cwm Mawr, 4 August 1951. (MLS/Bob Miller Collection)

1603 at Nantmawr Quarry with a freight on the Tanat Valley branch near Oswestry, 7 September 1957. (MLS)

1649 and 1646 stored out of use at Helmsdale after the closure of the Dornoch branch, 19 August 1960. (GW Trust)

In February 1957, the Scottish Region sought replacements for its two Drummond lightweight 0-4-4Ts (55051/3) and 1646 went north to Helmsdale's subshed at Dornoch to work the former Highland light railway branch from the junction at The Mound to Dornoch, followed after its successful trial by 1649, both remaining there to work the branch until it closed in June 1960. They were then moved to Dingwall and were withdrawn at the end of 1962.

With the severe reduction of wagon load freight traffic in the late 1950s and the Beeching axe to many rural branches in the early 1960s, the 16XX engines lost their raison d'être and withdrawal followed with some of the class having lives of less than a decade – indeed, some avoided a significant heavy works overhaul and most kept their original boilers to the end. The last working examples of the class finished their days at Croes Newydd on the London Midland Region in deplorable external condition. The first withdrawals were as early as 1959 (1600 and 1603) although 1600 was sold to the NCB for use at Risca Colliery and a number of other prematurely withdrawn engines were also sold. The shortest life of all was of the December 1954 built 1652 which spent its brief time at Swansea East Dock, was stored there by November 1959 and condemned in January 1960 after a life of a few weeks over five years. 1628 and 1638 were the last survivors, being withdrawn from Croes Newydd in September and August 1966 respectively. The last 1600s still based on the Western Region were at Llanelli with six lasting to the middle of 1965, with three, 1611, 1643 and 1651 being withdrawn in October 1965, just two months before the end of steam on the Region.

1649 at Dingwall, 27 September 1962. (GW Trust/F.K. Davies)

1658 with a Railway Enthusiasts' Club special brakevan train at Cinderford in the Forest of Dean. (MLS)

1658 at Faringdon with a railway club brakevan special, 13 May 1962. (R.C. Riley)

1628 a month before final withdrawal at Trevor and Croes Newydd, 4 August 1966. Note a couple of withdrawn 16XX and the cab of a withdrawn 8F or Black 5 in the background. (Bruce Oliver)

1635 was built in March 1951 and allocated to Oswestry. It was withdrawn from Croes Newydd in October 1959 and is seen here at the Swindon Dump on 10 June1960 awaiting scrapping. It was, in fact, sold to R.S. Hayes of Bridgend for breaking up in March 1961. (MLS)

Preservation

1638

1638 was built at Swindon to Hawksworth's design in 1951 and allocated to Llanelli depot, from where it regularly worked over the limited clearance Burry Port and Gwendraeth Valley line. It was one of the last survivors of the class at Croes Newydd, being withdrawn in August 1966. It was purchased privately and went to Buckfastleigh in November 1967 and operated on the South Devon Railway. In 1992, it was put up for sale and was bought by the Kent & East Sussex Railway where, in unauthentic GWR green livery, it currently operates.

Chapter 9

THE '1366' CLASS

Swindon Works built five short-wheelbased 0-6-0 saddle tanks in 1910 for dock shunting and other locations where the track curvature was severe. They replaced some of the Victorian tank engines such as the 1873 Cornwall Minerals Railway '1392' class built by Sharp Stewart, which could traverse 2ft radius curves. The new saddle tanks had modernised cabs with good visibility and bunkers holding two tons. They had two outside cylinders and Allan valve gear. They weighed just 35 tons, the saddle tank held 800 gallons and the tractive effort was 14,835 lbs. They were numbered 1361-1365.

However, some of the old '1392' class remained and Collett produced a further six engines similar to the '1361' class, but as pannier tanks, numbered 1366-1371. They were constructed in 1934 and had Belpaire fireboxes and many identical dimensions to the earlier Churchward engines. Wheel diameter was 3ft 8in, the two outside cylinders measured 16in x 20in, grate area was 10.7sqft, but the boiler pressure was increased from 150 to 165 lbs psi and therefore the tractive effort increased to 16,320 lbs. The tanks held a modest increase to 830 gallons and the overall weight increased slightly to 35 tons 15 cwt. The wheelbase remained as just 11ft. None of the tanks received ATC equipment as their role did not involve main line

Three of the '1366' pannier tanks, 1366, 1367 and 1369, brand new out-shopped in GW green livery, at Swindon Works, 1934. (MLS)

1367 at Weymouth with the dock warning bell clearly visible on the running plate under the pannier tank, 12 July 1936. (F.K. Davies/John Hodge)

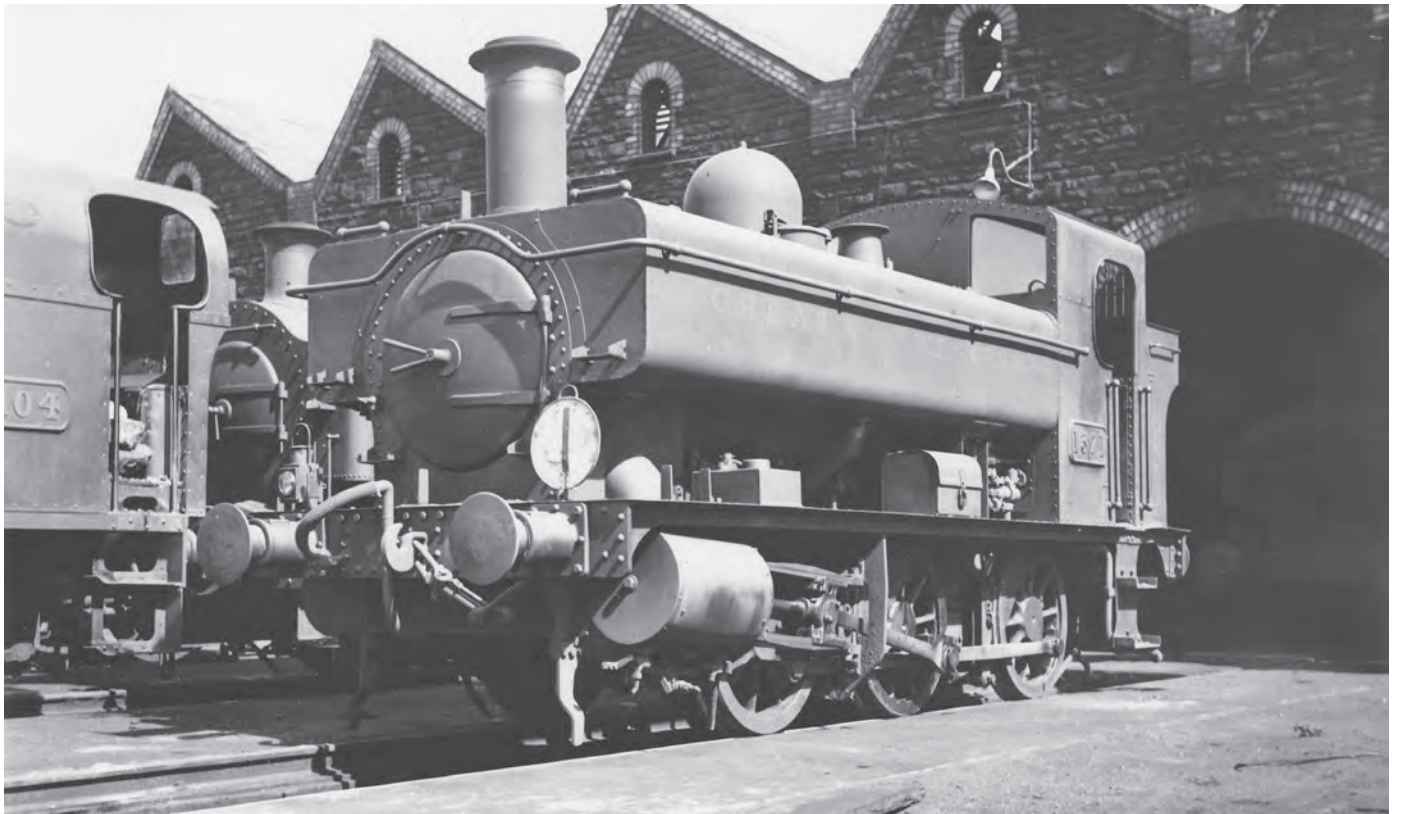

1371 at Danygraig alongside 0-4-0T dock shunters, 11 April 1937. (F.K. Davies/John Hodge)

1368 at Wadebridge sandwiched between two Beattie well tanks, 26 July 1962.
(MLS/A.C. Gilbert Collection)

running, but the three that later worked boat trains on Weymouth harbour received steam heating apparatus.

Initially, the engines were replacing the obsolete '1392' class as Swindon Works shunters and all bar 1371 were shedded there, that engine being sent to Llanelli, then Danygraig to replace 1393. In 1935, 1367 was transferred to Weymouth to haul Channel Island boat trains from the harbour through the town's streets to the main line and in 1939 1371 moved there also.

In 1946 and 1947, 1368 and 1370 followed to Weymouth, but 1371 had returned to Swindon. In addition to being fitted with steam heating equipment, these locomotives received a warning bell (hooked on the rear pannier support bracket) for use during the passage of the streets. In some of the heaviest summer season traffic, 1366 was loaned from Swindon. There were brief sojourns of 1368 and 1366 at Bridgwater docks and 1369 at Reading Signal Works, but 1367, 1368 and 1369 (the latter replacing 1370) stayed at Weymouth until made redundant by 204hp diesels in 1962.

1366 was withdrawn from Taunton shed in January 1961, 1370 from Weymouth in January 1960 and 1371 from Swindon in November 1960. The three remaining engines when released from their Weymouth duties, were sent to Wadebridge to replace the aged Beattie Well Tanks, 30585-30587, for freight operations on the china clay branch to Wenford Bridge. 1368 had been tested there successfully and the other two engines were hauled from

1368 and 1367 stand on Weymouth Quay, 1951. (MLS)

1368 saunters through the streets of Weymouth with a Channel Islands boat train, 31 July 1951. (MLS)

1368 stands at the head of a Channel Islands boat train at Weymouth Quay platform, 19 September 1957. (MLS/R. Hewitt)

1369 on an enthusiasts' special, hauling one brakevan at Dinmere Crossing between Wadebridge and Wenford Bridge, 9 August 1962. (MLS)

1369 at the head of *The Camel Valleyman* RCTS special brakevan train at Wenford Bridge, 27 April 1963. (Bruce Oliver)

Weymouth by Southern mogul 31798. Their activity there lasted two years until they were replaced, as at Weymouth, by 204hp diesels. 1367 and 1368 were withdrawn in October 1964, but 1369 was retained for preservation.

Preservation

1369

1369 was built at Swindon in February 1934 at a cost of £2,417. Initially retained at Swindon for Works shunting, it was transferred to Weymouth in 1960 and withdrawn from Wadebridge in October 1964. It was then acquired by the South Devon Railway and is currently (2017) operational in BR plain black livery.

DESIGNS THAT WERE NEVER BUILT

There were, as far as can be garnered, two designs of pannier tank that never came to fruition. Churchward proposed an 0-8-0 pannier tank around 1905 for heavy shunting – work then carried out by myriad 0-6-0 saddle tanks, though conversion to pannier tank form was beginning at about that time. The proposed dimensions were:

Two outside cylinders	17in x 24in
Wheel diameter	4ft 1½ in
Boiler	Swindon No. 5 Standard
Tank capacity	1,200 gallons
Axleload	12 tons
Total weight	48 tons
Tractive effort	19,656 lbs

The proposed light axleload would have permitted the engine universal access, though whether the curvature of dock and colliery sidings would have allowed an 0-8-0 is doubtful –

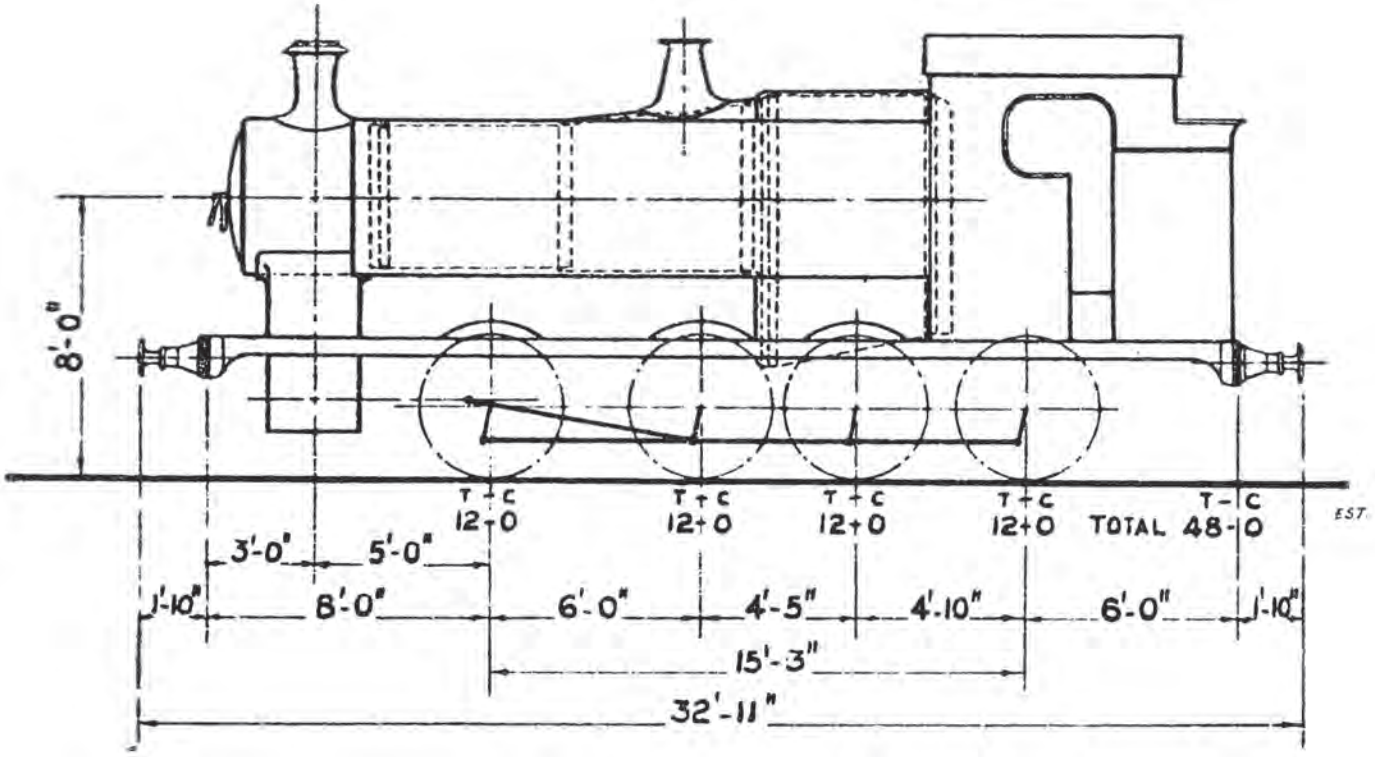

Churchward proposed
0-8-0PT

Hawksworth proposed
2-6-0PT

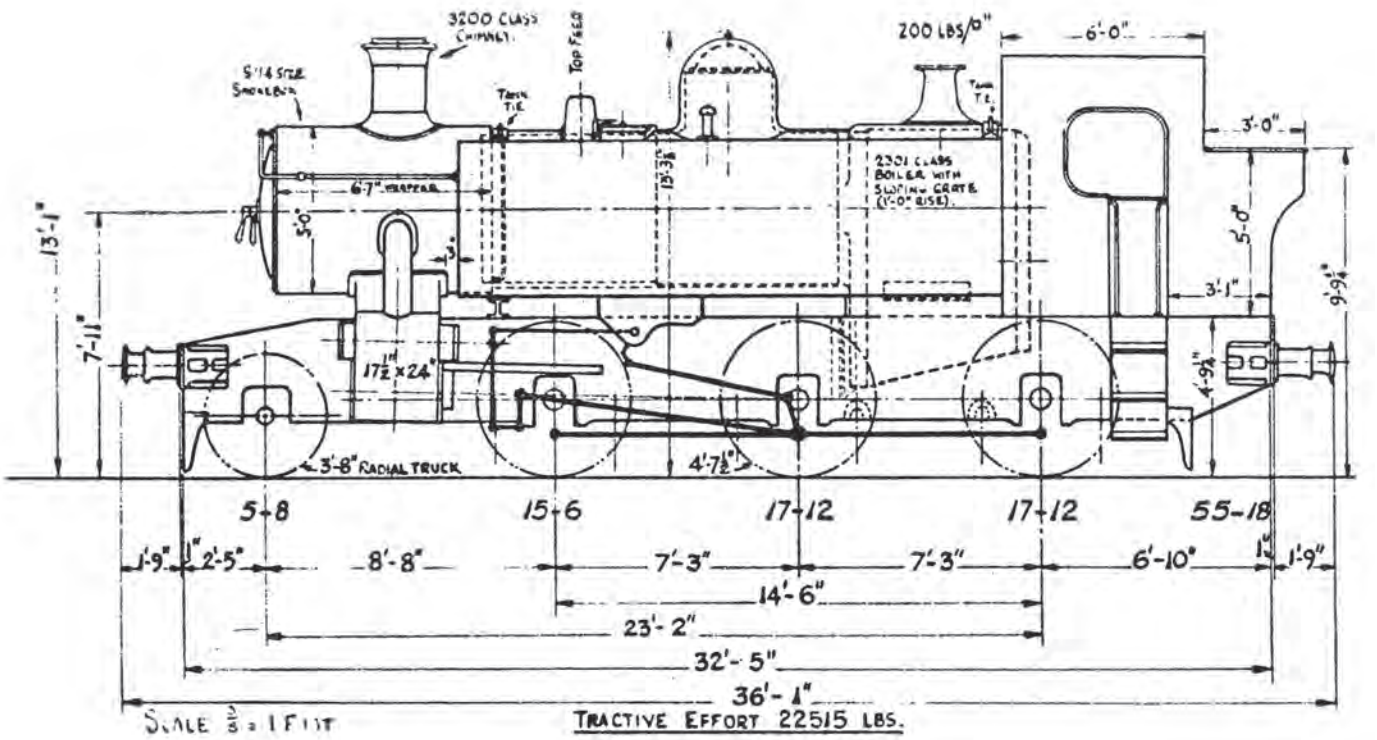

although with only a 15ft 3in wheelbase, it might have been acceptable. Presumably the proposal was dropped as the existing saddle tanks were adequate and energy was put into the investment in their conversion to pannier format.

The second abortive design came much later and was a Hawksworth proposal to build a 2-6-0 pannier tank with two outside cylinders of 17½in x 24in, a '2301 Dean Goods' boiler pressed at 200 lbs psi, 4ft 7½ in coupled wheels, 3ft 8in pony wheels, and Walschaerts valve gear. It was in effect a 1945 initial draft that was subsequently modified and evolved into the '1500' class 0-6-0PT. Total weight was a heavy 55 tons 18 cwt (the subsequent '1500' was even heavier at over 58 tons) and maximum axleload was 17 tons 12 cwt, much lower than the '1500' which bore the weight only on the coupled wheels. Tractive effort would have been 22,515 lbs, the same as the 57XX, 15XX and 94XX.

APPENDICES

Dimensions – '302' Class

As built in 1864

Cylinders	16in x 24in
Heating surface	1,204.36sqft
Grate area	13.6sqft
Wheel diameter	4ft 6in
Axleweight	12¼ tons
Engine weight	35 tons 13 cwt

As rebuilt 1901-08

Cylinders	17in x 24in
Boiler pressure	150 lbs psi
Heating surface	1,347.39sqft
Grate area	17.33sqft
Wheel diameter	4ft 7½ in
Tank capacity	1,000 gallons
Weight	42 tons 8 cwt
Tractive effort	15,935 lbs

As rebuilt from 1920s (variations)

Boiler pressure	165 lbs psi
Heating surface	1,197.7sqft (superheated locos – 1,142.6sqft)
Grate area	15.45sqft
Weight	44 tons 17 cwt (superheated locos – 45 tons 5 cwt)
Tank capacity	1,200 gallons

Statistics

No.	Built	Rebuilt as Pannier Tank	1880s allocation	Last allocation	Withdrawal	Mileage
302	9/64	–	Bristol	Taunton	8/18	
303	10/64	1/23	S.Wales	Aberayron	7/32	
304	10/64	9/22	S.Wales	Bridgend	5/28	
305	11/64	7/12	S.Wales	Ebbw Junction	4/31	
306	11/64	9/13	S.Wales	Oswestry	7/32	1,172,973
307	11/64	6/16 & 10/27*	S.Wales	Didcot	5/31	
308	12/64	2/13	S.Wales	Llanelli	11/29	
309	2/65	10/11	S.Wales	Yeovil	4/31	

Dimensions & Weight Diagram '1016' class

As built in 1867

Cylinders	16in x 24in
Wheel diameter	4ft 6in
Boiler pressure	140 lbs psi
Heating surface	1,137sqft
Grate area	16.25sqft
Axleload	13 tons
Engine weight	37 tons
Tank capacity	880 gallons
Tractive effort (85%)	13,540 lbs

As rebuilt 1893-97

Cylinders	17in x 24in
Wheel diameter	4ft 7 ½in
Boiler pressure	150 lbs psi
Heating surface	1,347.39sqft
Grate area	17.33sqft
Axleload	15 tons
Engine weight	43 tons 2 cwt
Tank capacity	1,020-1,072 gallons
Tractive effort	15,935 lbs

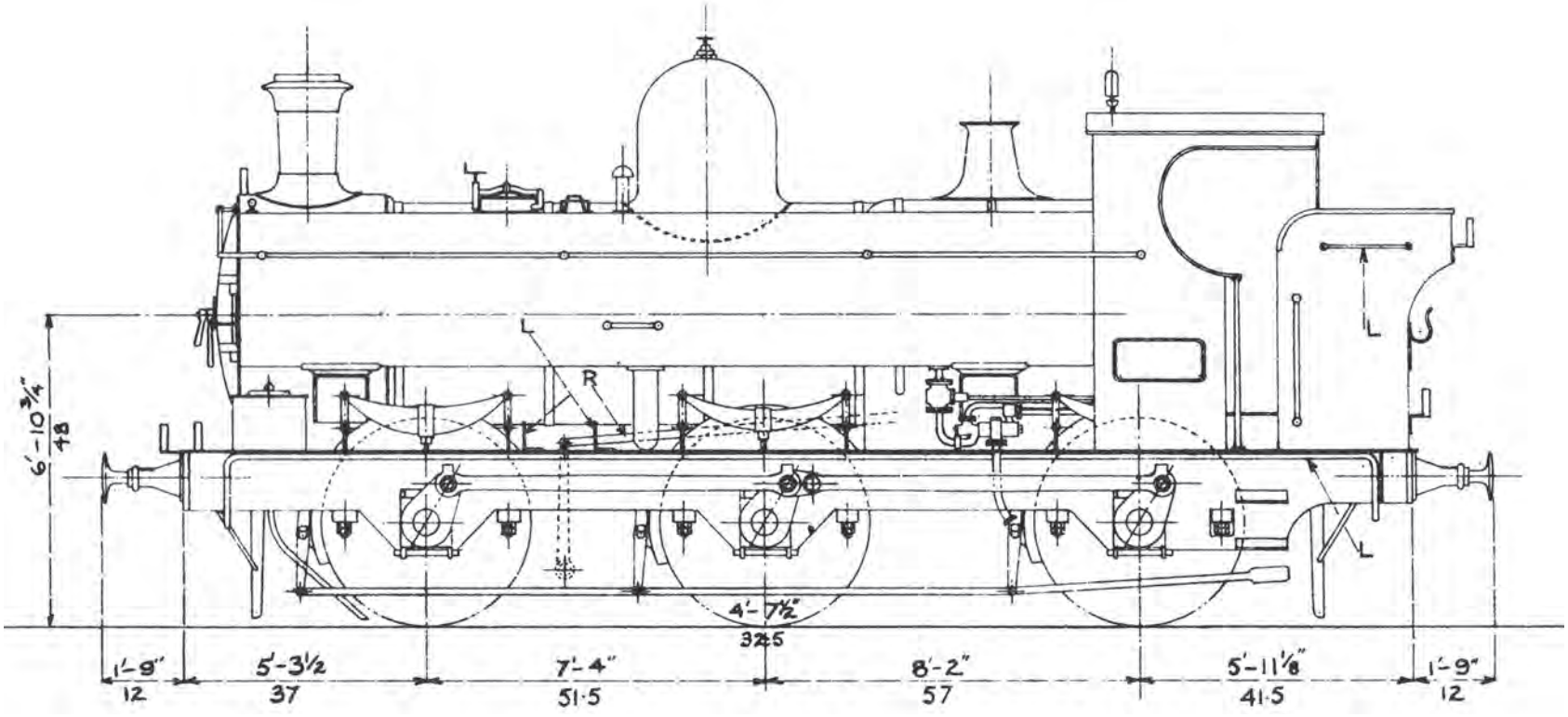

As rebuilt with Belpaire firebox and pannier tanks, 1911+
As above except:

Boiler pressure	150 lbs psi (those with 'P' boiler 165 lbs psi)
Heating surface	1,141.7sqft ('P' boiler – 1,197.7sqft)
Grate area	15.57sqft ('P' boiler- 15.45sqft)
Axleload	14¾ tons ('P' boiler – 15 ½ tons)
Engine weight	42 tons 7 cwt ('P' boiler – 45 tons 12 cwt)
Tank capacity	1,000 gallons ('P' boiler – 1,200 gallons)
Tractive effort	17,525 lbs

Statistics

No.	Built	Rebuilt as PT	First allocation	Last allocation	Withdrawal	Mileage
1016	2/67	7/26	Southern Division*	Ebbw Junction	7/30	
1017	1./67	12/23	Southern Division	Duffryn Yard	1/29	
1018	3/67	12/25	Southern Division	Llanelli	8/32	
1019	3/67	11/13	Southern Division	Ebbw Junction	8/34	
1020	4/67	–	Southern Division	Merthyr	1/28	
1021	5/67	9/24	Southern Division	Merthyr	8/32	1,224,834
1022	6/67	10/19	Northern Division*	Cardiff	12/25	
1023	6/67	5/21	Northern Division	Stafford Road	8/28	
1024	7/67	1/25	Northern Division	Neath	2/29	
1025	7/67	–	Southern Division	Ebbw Junction	12/27	
1026	8/67	6/19	Northern Division	Oxford	4/31	
1027	9/67	2/21	Northern Division	Shrewsbury	4/30	
1028	9/67	1/12	Northern Division	Stafford Road	8/28	
1029	10/67	–	Southern Division	Oswestry	12/10	
1030	10/67	5/27	Southern Division	Aberbeeg	4/30	
1031	11/67	5/24	Northern Division	Tyseley	8/28	
1032	12/67	–	Southern Division	Abergavenny	4/28	
1033	12/67	5/25	Northern Division	Neath	11/29	
1034	12/67	2/20	Northern Division	Gloucester	7/30	
1035	12/67	–	Northern Division	Aberystwyth	6/14	
1036	1/68	9/13	Southern Division	Gloucester	3/31	
1037	2/68	9/27	Northern Division	Kidderminster	3/31	
1038	2/68	8/24	Northern Division	Banbury	10/29	
1039	3/68	2/16	Northern Division	Pontypool	11/28	
1040	5/70	–	Northern Division	Kidderminster	1/29	
1041	6/70	12/17	Northern Division	Shrewsbury	6/34	
1042	6/70	1/17	Southern Division	Aberbeeg	5/32	
1043	7/70	–	Northern Division	Machynlleth	12/10	
1044	7/70	4/15	Northern Division	Oxford	12/29	
1045	8/70	1/16	Northern Division	Shrewsbury	1/35	
1046	8/70	9/23	Southern Division	Stafford Road	9/31	
1047	9/70	1/12	Northern Division	Stafford Road	7/35	1,114,942
1048	9/70	11/27	Northern Division	Merthyr	6/30	
1049	10/70	7/24	Northern Division	Neath	6/28	
1050	10/70	2/13	Northern Division	Ebbw Junction	12/31	
1051	11/70	6/17	Southern Division	Ebbw Junction	7/30	
1052	11/70	8/23	Southern Division	Old Oak C'mon	9/29	

No.	Built	Rebuilt as PT	First allocation	Last allocation	Withdrawal	Mileage
1053	11/70	8/18	Southern Division	Worcester	2/31	
1054	12/70	2/24	Southern Division	Neath	8/31	
1055	12/70	2/24	Southern Division	Pantyffynnon	8/32	
1056	1/71	10/19	Northern Division	Aberdare	6/30	
1057	1/71	4/12	Northern Division	Tondu	12/28	
1058	2/71	1/16	Northern Division	Whitland	5/28	
1059	2/71	11/12	Northern Division	Chester	5/33	
1060	3/71	11/27	Northern Division	Southall	4/32	
1061	3/71	6/25	Northern Division	Stafford Road	3/32	
1062	4/71	1/28	Northern Division	Old Oak C'mon	4/31	
1063	4/71	–	Northern Division	Merthyr	3/28	
1064	5/71	5/19	Southern Division	Old Oak C'mon	2/29	
1065	5/71	7/21	Northern Division	Yeovil	4/31	
1066	6/71	10/13	Northern Division	Reading	4/32	
1067	6/71	–	Northern Division	Ebbw Junction	3/28	
1068	6/71	–	Southern Division	Portmadoc	11/10	
1069	7/71	5/20	Northern Division	Neath N&B	8/32	
1070	7/71	8/23	Northern Division	Chester	8/32	
1071	7/71	3/14	Northern Division	Whitland	4/31	
1072	8/71	12/24	Northern Division	Oxley	5/34	
1073	9/71	12/11	Northern Division	Croes Newydd	2/29	
1074	9/71	–	Southern Division	Cardiff	2/28	
1075	10/71	9/23	Southern Division	Ludlow	6/34	

* Northern Division included the Wolverhampton, Worcester Motive Power Districts. Southern Division included South Wales, Bristol and London Districts. No examples of the '1016 class' were known to have been allocated to the Newton Abbot District apart from 1033 which was at Taunton until about 1921 when it was transferred to Neath.

Dimensions & Weight Diagram – '1076 Buffalo' class

As built

Cylinders	17in x 24in
Wheel diameter	4ft 6in
Boiler pressure	140 lbs psi
Heating surface	1,160sqft
Grate area	16.85sqft
Axleload	12 tons 14 cwt
Engine Weight	37 tons 14 cwt
Tank capacity	850 gallons
Tractive effort (85%)	15,285 lbs

1581 – 1660 series (built from 1879)

As above, except:

Heating surface	1,154.5sqft
Grate area	16.37sqft
Axleload	14 tons
Engine Weight	40 tons 8 cwt
Tank capacity	1,040 gallons

After boiler rebuilds (1888-1902)
As above except:

Wheel diameter	4ft 7½ in
Boiler pressure	150 lbs psi
Heating surface	1,366.1sqft
Grate area	17.33sqft
Axleload	14 tons 12½ cwt
Engine Weight	43 tons 10 cwt
Tank capacity	1,075 gallons (range varied from 1,020-1,100 gallons)
Tractive effort (85%)	15,935 lbs

After fitting with pannier tanks and 'Q' or 'B4' boilers
As above, except:

Boiler pressure	165 lbs psi
Heating surface	1,157.38sqft
Grate area	15.57sqft
Axleload	15 tons 8 cwt
Engine Weight	43 tons 18 cwt
Tank capacity	1,000 gallons
Tractive effort (85%)	17,525 lbs.

Weight diagram – Saddle Tank

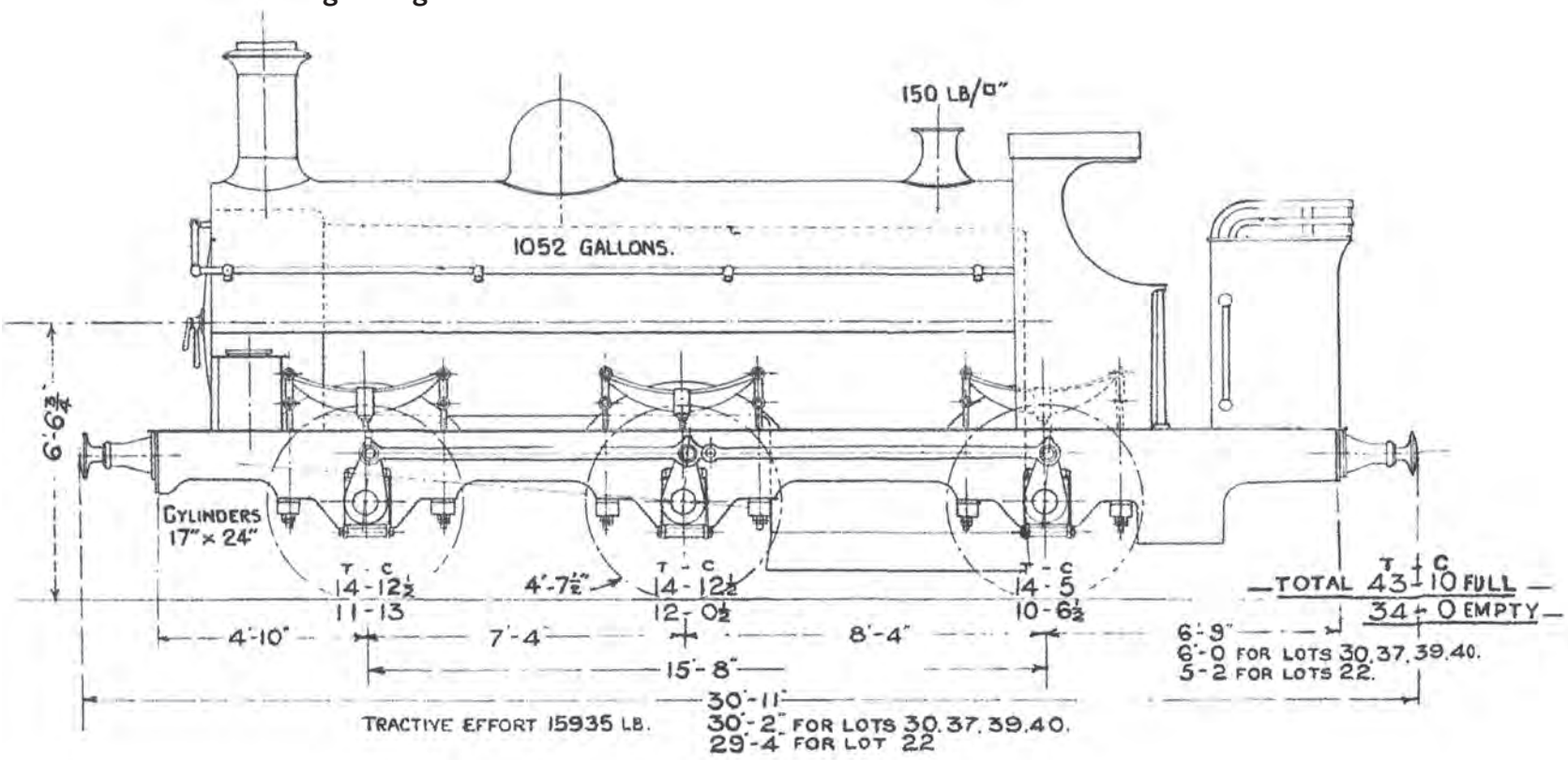

Weight diagram – pannier tank

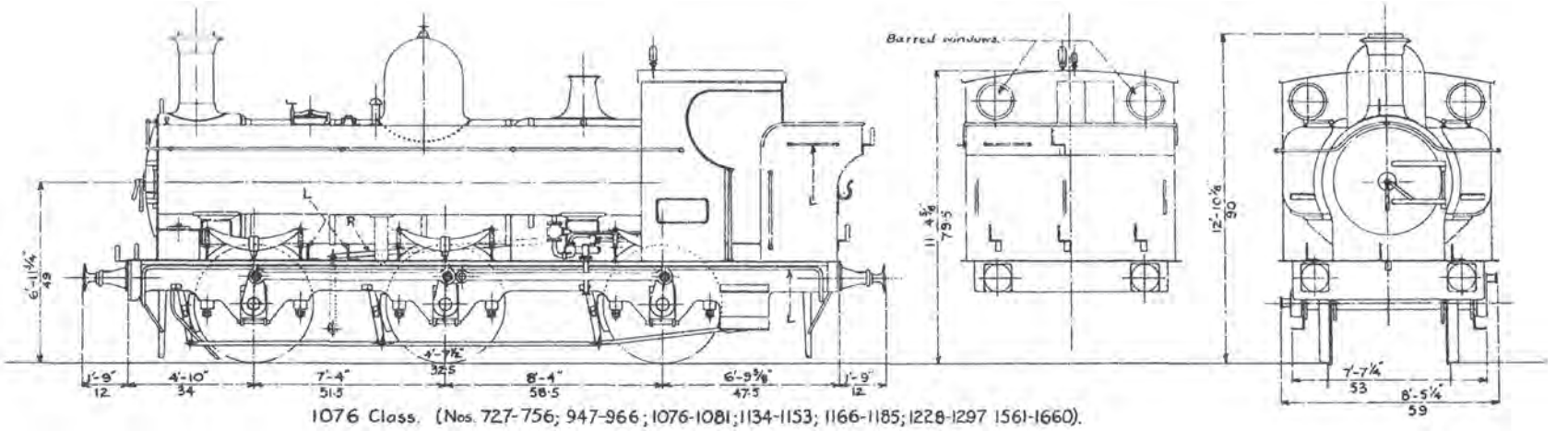

Statistics

* built as Broad Gauge 'Convertibles', Standard Gauge from 1892
** Converted to Broad Gauge 1887-1892, (All Broad Gauge engines allocated to the Newton Abbot District)
# Enclosed cabs & enlarged bunkers were fitted to 120 engines between 1924 & 1927
+ auto-fitted at some stage between 1917 and 1930
$ fitted with spark arresting chimney at saddle tank stage of its life
% fitted with spark arresting chimney at pannier tank stage of its life
@ Fitted with ATC after 1930

No.	Built	Rebuilt as PT	Withdrawal	Last Allocation	Comment
727	10/72	7/22	12/29	Carmarthen	
728+$	10/72	12/23	6/29	Duffryn Yard Tfr to Rhondda & Swansea Bay Rly 10/15 – 1/22	
729	11/72	–	11/10	Cardiff Docks	
730#	11/72	7/22	9/30	Tondu	
731#	11/72	4/21	9/29	Old Oak Common	
732	12/72	4/25	7/32	Tondu	
733	12/72	8/22	10/34	Duffryn Yard	
734	12/72	9/26	3/31	Cardiff	
735#	1/73	9/21	5/30	Frome	
736	1/73	12/12	8/32	Cardiff	
737	1/73	10/27	7/32	Exeter	
738+@#	1/73	5/17	8/36	Landore	1,253,653 miles (highest mileage of the class)
739#	1/73	10/25	4/30	Weymouth	
740#	1/73	10/14	9/29	Old Oak Common	
741#	2/73	11/24	4/31	Merthyr	
742	2/73	–	3/19	Barry	
743	2/73	2/16	12/34	Pontypool	
744	2/73	4/16	5/32	Pontypool	
745#	2/73	5/25	4/32	Duffryn Yard	

No.	Built	Rebuilt as PT	Withdrawal	Last Allocation	Comment
746%#	2/73	5/16	9/27	Cheltenham	
747	3/73	–	3/11		
748	3/73	4/19	8/32	Aberdare	
749#	3/73	9/12	6/28	Neyland	
750	3/73	5/20	10/30	Ebbw Junction	
751#	3/73	4/15	2/31	Westbury	
752@	4/73	12/14	8/34	Llanelli	
753+@#	4/73	6/24	2/35	Ebbw Junction	
754	4/73	–	7/11		
755#	4/73	1/18	5/29	Llanelli	
756	4/73	8/12	12/28	Llanelli	
947@	5/74	5/15	7/32	Neath N&B	
948	5/74	–	3/15	Cathays	
949	5/74	7/22	10/34	Bridgend	
950@%	6/74	12/12	5/32	Swindon	
951	6/74	4/20	10/30	Llanelli	
952#	6/74	5/20	3/31	Neyland	
953$	6/74	4/23	9/29	Old Oak Common	
954	6/74	2/19	2/31	Aberdare	
955	6/74	7/16	4/31	Ebbw Junction	
956#	6/74	10/16	5/30	Reading	
957#	7/74	6/22	8/32	Swansea E. Dock Tfr to Rhondda & Swansea Bay Rly 3/14 – 12/21	
958#	7/74	1/15	11/33	Aberbeeg	
959$#	7/74	6/26	5/30	Taunton	
960#	7/74	8/24	5/32	Cardiff	
961	7/74	12/16	7/30	Neath	
962#	7/74	12/27	3/31	Gloucester	
963	8/74	3/22	6/36	Pontypool	
964	8/74	2/16	4/29	Swansea East Dock	
965	8/74	1/14	1/30	Severn Tunnel Jcn	
966#	8/74	8/19	1/29	Westbury	
1076#	5/70	1/26	7/30	St Blazey	
1077#	5/70	10/18	7/31	Aberdare	
1078	5/70	9/23	10/28	Stafford Road	
1079	6/70	9/13	10/30	Newport Pill	
1080	6/70	11/27	5/34	Croes Newydd	
1081	6/70	10/19	2/31	Oxford	
1134@	11/74	5/14	11/34	Oxford	Named *Buffalo* until 1914
1135	11/74	10/14	4/31	Westbury	
1136	11/74	9/25	2/35	Croes Newydd	
1137@	12/74	2/14	10/33	Ebbw Junction	
1138	12/74	12/19	5/30	Ebbw Junction	
1139	12/74	2/13	6/30	Kidderminster	
1140%	12/74	8/11	9/28	Stourbridgwe	

No.	Built	Rebuilt as PT	Withdrawal	Last Allocation	Comment
1141@#	12/74	6/22	8/32	Duffryn Yard	
1142@	12/74	8/11	12/35	Duffryn Yard	
1143@	12/74	3/14	8/32	Cardiff	
1144	1/75	12/14	3/31	Merthyr	
1145@	1/75	6/20	5/34	Duffryn Yard	
1146	1/75	9/20	4/29	Newport Dock St	
1147+#	1/75	2/23	1/31	Tyseley	
1148@	1/75	4/22	7/34	Exeter	
1149	2/75	1/20	9/28	Bristol SPM	
1150	2/75	–	10/28	Newport Pill	
1151	2/75	9/19	7/32	Aberdare	
1152@#	2/75	3/20	5/35	Southall	
1153#	2/75	8/21	5/32	Tondu	
1166@	8/75	1/22	6/34	Yeovil	
1167+@#	8/75	1/13	12/36	Landore Tfr to Rhondda & Swansea Bay Rly, 7/19 – 1/22,	
1168+#	8/75	9/23	10/28	Plymouth Millbay	
1169+#	8/75	6/17	11/34	Kidderminster	
1170	8/75	2/18	6/27	Neath N&B	
1171@#	8/75	8/15	1/34	Tondu	
1172	9/75	10/20	4/30	Bristol SPM	
1173#	9/75	10/14	8/28	Ebbw Junction	
1174	9/75	7/17	7/34	Tondu	
1175@#	9/75	9/11	11/33	Oxford	
1176	10/75	2/24	3/31	Exeter	
1177	10/75	6/24	4/29	Bristol SPM	
1178	10/75	6/20	4/30	Landore	
1179$	11/75	10/20	8/35	Yeovil	
1180	11/75	5/11	11/34	Yeovil	
1181#	11/75	5/16	12/35	Tondu	
1182#	11/75	11/20	9/29	Swindon	
1183#	11/75	6/22	4/30	Kidderminster	
1184	12/75	–	10/03		
1185	12/75	11/19	1/31	Tondu	
1228*	10/76	6/16	9/31	Weymouth	
1229*	10/76	9/17	2/31	Ebbw Junction	
1230*@	11/76	8/14	5/32	Neyland	
1231*	11/76	2/28	9/30	Gloucester	
1232*	11/76	3/23	8/30	Bristol SPM	
1233 *	11/76	10/22	3/31	Westbury	
1234*+@	11/76	11/28	12/35	Cathays	
1235*+@#	12/76	5/24	10/37	Aberdare	
1236*	12/76	6/23	2/31	Garnant	
1237*#	12/76	11/15	12/34	Banbury	
1238**#	12/76	2/26	8/32	Duffryn Yard	
1239**	12/76	9/27	10/35	Bridport	

No.	Built	Rebuilt as PT	Withdrawal	Last Allocation	Comment
1240**@	1/77	9/17	10/35	Reading	
1241**#	1/77	6/21	9/28	Old Oak Common	
1242**	1/77	4/13	3/31	Bridport	
1243**@	1/77	2/13	6/32	Worcester	
1244**	2/77	10/20	5/30	Exeter	
1245**@	2/77	2/27	9/35	Aberdare	
1246**@#	2/77	12/24	12/34	Kidderminster	
1247**+@	2/77	3/14	5/39	Cathays	
1248**@	3/77	2/16	5/31	Reading	
1249**#	3/77	12/20	10/29	Oxford	
1250**@#	3/77	11/25	3/35	Oxford	
1251**#	3/77	2/25	12/29	Bristol Bath Road	
1252**+@#	3/77	4/11	10/32	Laira	
1253**	4/77	6/13	6/32	Chester	
1254**+@#	4/77	7/16	2/37	Kidderminster	
1255**	4/77	10/28	3/31	Ebbw Junction	
1256**+@#	5/77	7/21	1/36	Ebbw Junction	
1257**%	5/77	11/19	5/30	Old Oak Common	
1258	5/77	4/25	3/29	Tyseley	
1259	5/77	4/20	7/32	Taunton	
1260@	5/77	11/21	8/34	Leamington	
1261#	5/77	9/21	8/28	Pontypool	
1262	5/77	8/15	4/30	Ebbw Junction	
1263%	6/77	3/20	1/34	Didcot	
1264	6/77	10/23	4/28	Llanelli	
1265+@#	6/77	10/22	9/37	Ebbw Junction	
1266	6/77	3/16	10/30	Aberbeeg	
1267#	7/77	2/25	5/30	Tondu	
1268@#	8/77	2/14	11/34	Ebbw Junction	
1269+@#	8/77	4/21	4/38	Cathays	
1270	8/77	10/19	3/31	Llanelli	
1271+@#	9/77	10/21	4/37	Landore	
1272#	9/77	12/20	8/34	Aberdare	
1273	9/77	11/23	11/33	Ebbw Junction	
1274	9/77	4/16	5/30	Ebbw Junction	
1275#	10/77	12/16	9/28	Merthyr	
1276	10/77	2/25	9/34	Leamington	
1277	10/77	–	6/11		
1278+@	10/77	10/16	2/36	Abercynon	
1279	11/77	11/13	9/35	Llanelli	
1280	11/77	4/22	4/29	Newport Dock St	
1281	11/77	3/13	5/35	Bridport	
1282%#	12/77	4/16	12/36	Newton Abbot	
1283#	12/77	11/20	8/29	Bristol SPM	
1284+@#	1/78	6/23	5/36	Abercynon	
1285@	1/78	3/19	12/34	Cardiff	
1286	1/78	3/19	4/30	Newton Abbot	
1287@#	1/78	2/25	4/46	Leamington	

No.	Built	Rebuilt as PT	Withdrawal	Last Allocation	Comment
1288#	2/78	10/18	7/30	Aberbeeg	
1289@#	2/78	11/25	7/34	Weymouth	
1290@#	2/78	4/13	8/32	Tondu	
1291#	2/78	10/16	5/29	Westbury	
1292@	3/78	7/15	12/34	Ebbw Junction	
1293	3/78	6/16	6/28	Reading	
1294#	3/78	6/21	3/31	Oxford	
1295#	4/78	2/23	9/30	Reading	
1296	4/78	6/20	9/36	Tondu	
1297@	4/78	2/14	7/32	Chippenham	
1561*@#	11/78	10/18	7/34	Tondu	
1562*#	11/78	6/26	3/38	Taunton	
1563*	11/78	12/23	2/31	Sold to Neath & Brecon Rly, 10/11, return to GWR 10/22	
1564*#	12/78	5/25	2/31	Newton Abbot	
1565*@%	12/78	1/21	12/38	Didcot	
1566**@	12/78	2/13	5/35	Weymouth	1st engine with cab
1567**+@#	12/78	2/14	8/36	Stafford Road	
1568**@#	12/78	2/18	4/38	Danygraig	
1569**@#	1/79	12/18	7/32	Oxford	
1570**+@#	1/79	11/12	10/35	Pontypool	
1571**#	1/79	11/18	2/31	Cardiff	
1572**@#	1/79	4/14	1/33	Tondu	
1573**@#	2/79	5/13	6/35	Taunton	
1574**@	2/79	10/27	12/37	Oxford	
1575**	2/79	8/11	6/30	Laira All engines from here built with extended cab roofs	
1576**#	2/79	10/11	3/28	Swindon	
1577**@#	3/79	12/21	12/34	Tondu	
1578**	3/79	12/27	9/33	Bridgwater	
1579**	3/79	1/21	6/30	Llantrisant	
1580**	3/79	9/15	8/35	Aberbeeg	
1581@	4/79	–	7/29	Leominster	Steel firebox until 11/84
1582	5/79	8/22	2/31	Danygraig	Steel firebox until 9/83
1583#	5/79	2/19	11/28	Neath	
1584	5/79	8/12	9/33	Neath	
1585	5/79	4/19	4/46	Aberdare	
1586	6/79	11/18	2/31	Westbury	
1587@#	6/79	12/14	1/34	St Blazey	
1588#	6/79	6/17	8/29	Llanelli	
1589	6/79	9/22	1/28	Bristol Bath Road	
1590#	7/79	12/18	2/31	Pembroke Dock	
1591	7/79	–	8/22	Sold to Neath & Brecon Rly, 12/12	
1592	7/79	6/11	2/28	Ebbw Junction	
1593@#	8/79	4/20	7/34	Ebbw Junction	
1594	8/79	–	6/30	Swindon	
1595	8/79	10/11	12/27	Worcester	

No.	Built	Rebuilt as PT	Withdrawal	Last Allocation	Comment
1596#	9/79	3/17	10/28	Tondu	Steel firebox until 10/83
1597#	9/79	6/16	12/34	Goodwick	
1598@#	10/79	12/16	5/35	Yeovil	
1599@	10/79	7/23	12/36	Danygraig	
1600+@#	11/79	10/24	12/37	Pontypool Road	
1601	11/79	3/15	4/31	Didcot	
1602	12/79	2/14	1/28	Newport Dock St	
1603	12/79	6/26	1/31	Bristol Bath Road	
1604#	12/79	10/16	9/29	Bristol SPM	
1605#	12/79	5/14	3/31	Aberbeeg	
1606	12/79	10/11	3/31	Abergavenny	
1607#	1/80	2/19	9/30	Merthyr	
1608@#	1/80	7/17	5/35	Neath	
1609	1/80	11/16	3/31	Duffryn Yard	
1610%	2/80	9/27	10/35	Didcot	
1611@#	2/80	7/15	9/35	Duffryn Yard	
1612#	2/80	–	12/28	Tondu	
1613#	2/80	8/15	12/29	St Blazey	
1614#	3/80	2/17	3/28	Abergavenny	
1615@#	3/80	5/17	4/39	Yeovil	
1616	3/80	11/20	1/29	Newport Dock St	
1617@	3/80	3/21	12/34	Laira	
1618	4/80	–	5/29	Ebbw Junction	
1619#	4/80	5/15	3/29	Bristol SPM	
1620@#	4/80	11/17	11/37	Swindon	
1621@	5/80	1/11	1/32	Cardiff	
1622	5/80	2/15	6/29	Tondu	
1623	5/80	6/13	12/36	Whitland	
1624@#	5/80	4/25	4/46	Yeovil	
1625	6/80	9/17	8/28	Newport Dock St	
1626#	6/80	6/12	8/28	Bristol SPM	
1627	6/80	3/13	5/30	Worcester	
1628#	6/80	4/14	10/32	Llantrisant	
1629@#	7/80	11/24	9/37	Swansea East Dok	
1630	7/80	9/21	11/34	Neath N&B	
1631#	7/80	12/13	6/29	Llanelli	
1632@	8/80	11/13	4/39	Stafford Road	
1633#	8/80	3/20	1/29	Llantrisant	
1634#	8/80	7/15	7/29	Oswestry	
1635#	9/80	8/11	4/32	Aberbeeg	
1636#	9/80	10/14	4/29	Merthyr	
1637#	10/80	8/13	10/35	Neath	
1638@#	10/80	12/17	7/38	Llanelli	
1639#	10/80	6/14	3/31	St Blazey	
1640#	11/80	5/17	3/31	Pontypool	
1641#	11/80	3/13	11/36	Neath	
1642@#	11/80	6/21	10/35	Llantrisant	
1643	12/80	2/14	2/31	Newport Pill	

No.	Built	Rebuilt as PT	Withdrawal	Last Allocation	Comment
1644	12/80	12/23	6/35	Frome	
1645@	12/80	4/27	12/34	Bridgend	
1646@	12/80	8/18	12/34	Bristol SPM	
1647@	1/81	3/14	11/36	Aberdare	
1648#	1/81	11/13	4/30	Llanelli	
1649	2/81	5/20	9/35	Bridgend	
1650@#	2/81	10/26	3/38	Exeter	
1651#	3/81	12/11	4/30	Old Oak Common	
1652	3/81	1/23	6/32	Weymouth	Tfr to Rhondda & Swansea Bay Rly, 1/12 – 1/22
1653	3/81	3/20	12/30	Severn Tunnel Jcn	
1654#	4/81	6/25	1/32	Exeter	
1655	4/81	5/13	7/31	Swansea East Dock	
1656	4/81	6/14	5/30	Pontypool	
1657	5/81	3/27	2/31	Bristol SPM	
1658@	5/81	12/14	7/34	Laira	
1659#	5/81	5/16	10/30	Southall	
1660	6/81	10/14	6/38	Swindon	Tfr to Rhondda & Swansea Bay Rly, 6/19 – 1/22

Dimensions & Weight Diagram – '119' class

As rebuilt from tender engines in 1878

Cylinders	17in x 24in
Wheel diameter	4ft 6in
Boiler pressure	140 lbs psi
Heating surface	1,154.44sqft
Tank capacity	1,000 gallons
Weight	44 tons 13 cwt
Axleload	15 tons 13 cwt

As reboilered after 1895

As above, except:

Wheel diameter	4ft 7½ in
Boiler pressure	150 lbs psi
Heating surface	1,366.1sqft
Grate area	17.33sqft
Tank capacity	1,080 gallons
Weight	46 tons 16 cwt
Tractive effort	15,935 lbs

As rebuilt with pannier tanks

As above except:

Boiler pressure	165 lbs psi
Heating surface	1,157.38sqft
Tank capacity	1,000 gallons
Weight	45 tons 4 cwt
Axleload	15 tons 19 cwt
Tractive effort	17,525 lbs

Weight diagram – saddle tank form

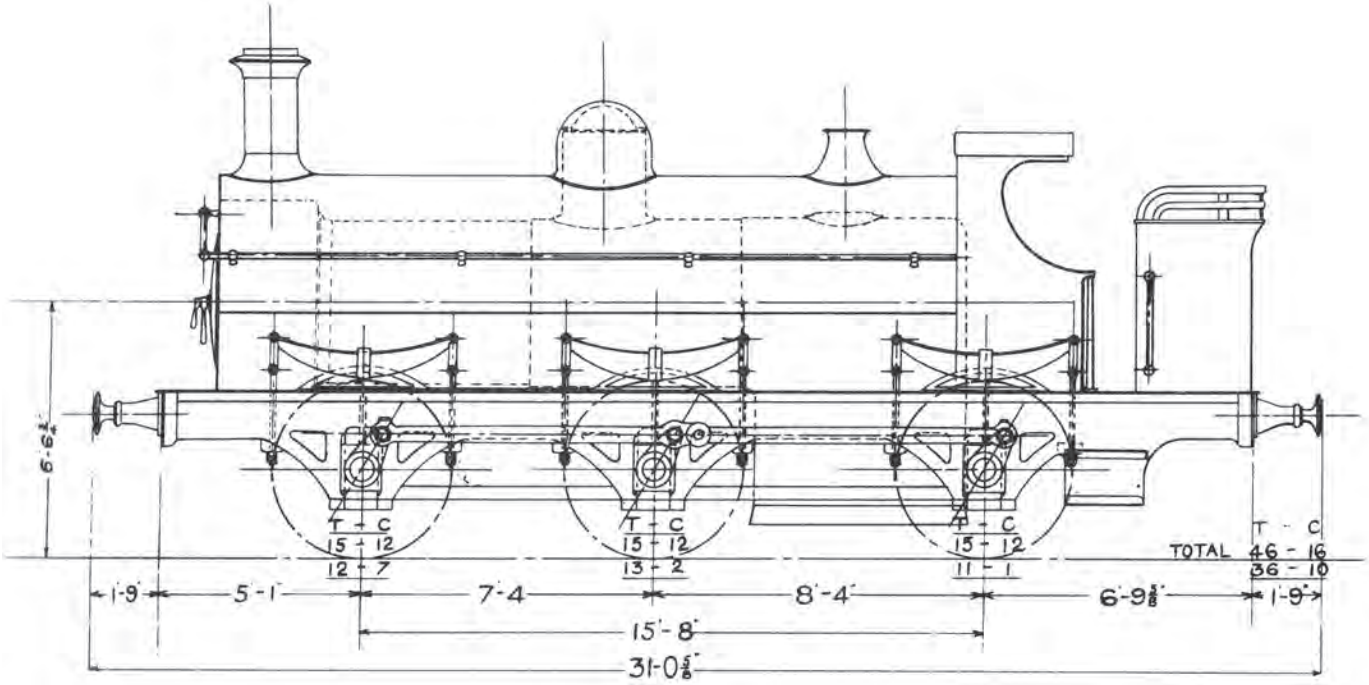

Statistics

No.	Built	Rebuilt as PT	First allocation	Last allocation	Withdrawal	Mileage
119	12/78	–	Northern Division	Cae Harris	4/19	
120	5/79	3/17	Northern Division	Oswestry	9/33	1,224,467
121	10/79	4/18	Northern Division	Tondu	8/28	1m +
123	12/79	10/20	Northern Division	Newport Dock St	11/27	1m +
124	4/80	3/17	Northern Division	Old Oak Common	5/27	1m +
125	7/80	7/16	Northern Division	Tondu	1/26	1m +
126	3/81	10/20	Northern Division	Tondu	7/28	1m +
127	8/81	–	Northern Division	Rhymney	11/10	
128	5/82	12/23	Northern Division	Ebbw Junction	1/27	1906 – 18 at OOC, 1m +
129	7/82	8/13	Northern Division	Cardiff Docks	5/19	
130	2/83	11/13	Northern Division	Cardiff Docks	5/19	

Dimensions & Weight Diagram – '322' class

As rebuilt from tender engines in 1878, & further rebuilt from 1902

Cylinders	17 in x 26in
Wheel diameter	5ft 2in
Boiler pressure	140 lbs psi
Heating surface	1,281sqft
Grate area	15.5sqft
Tank capacity	1,100 gallons
Weight	45 tons 2 cwt
Axleload	16 tons 2 cwt
Tractive effort	14,422 lbs

As rebuilt with pannier tanks
As above except:

Cylinders	17½ in x 26in
Boiler pressure	165 lbs psi
Heating surface	1,142.6sqft
Tank capacity	1,200 gallons
Tractive effort	18,010 lbs

Weight diagram – as 1866 built 0-6-0 tender locomotive

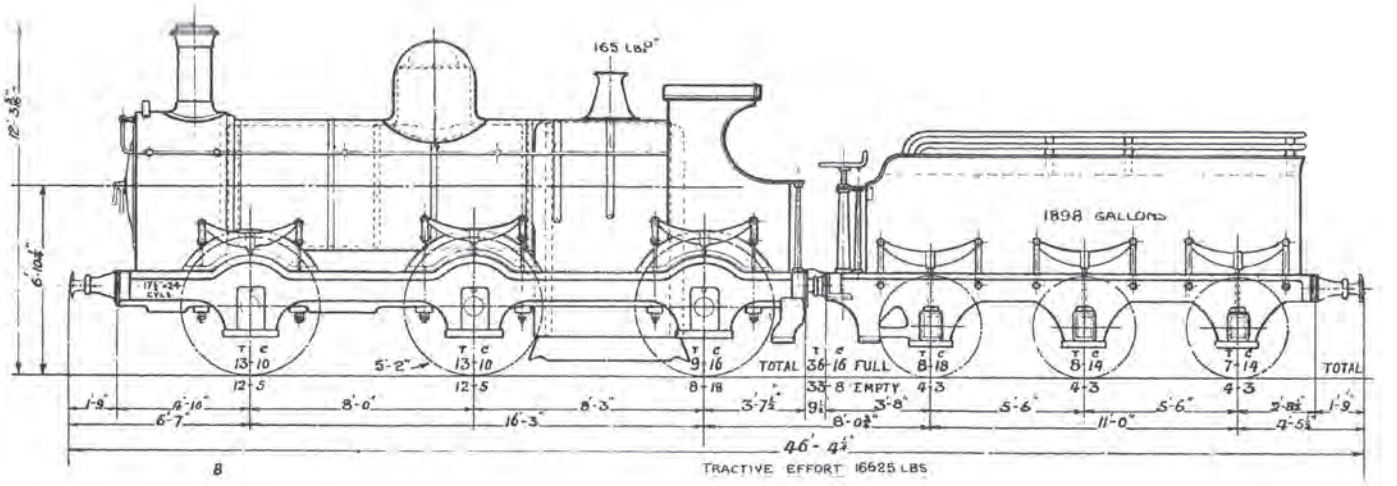

Weight diagram – saddle tank

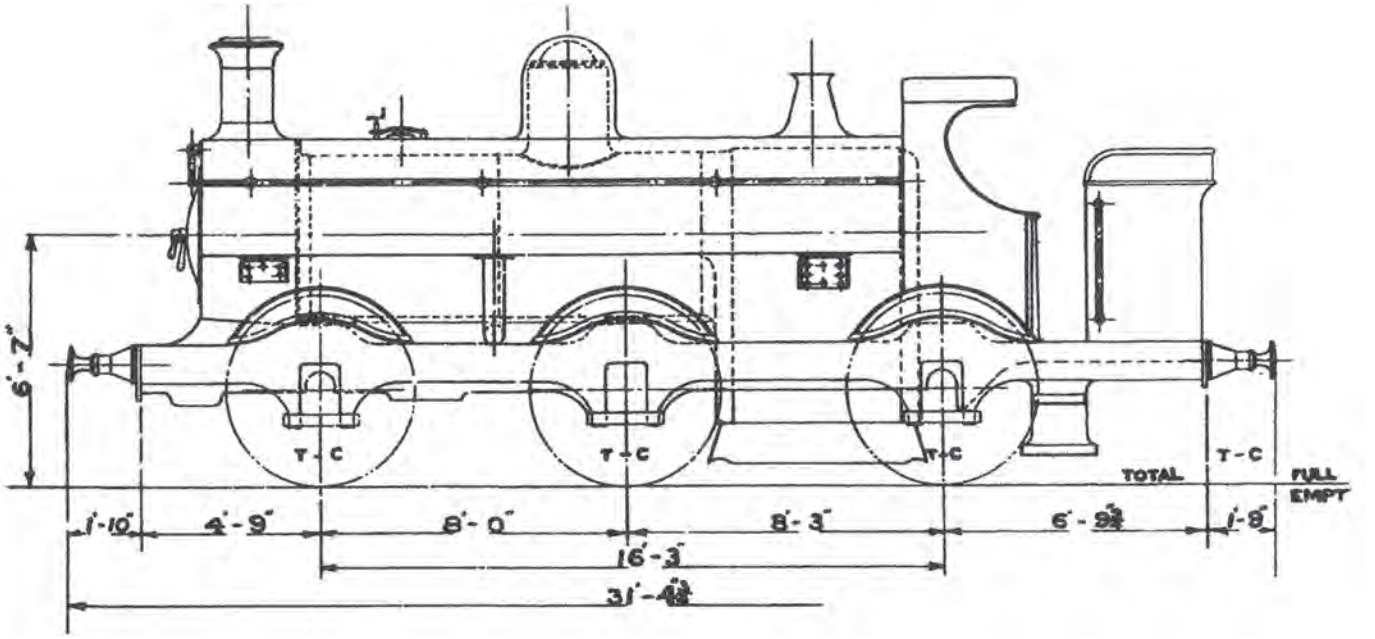

Weight diagram – pannier tank

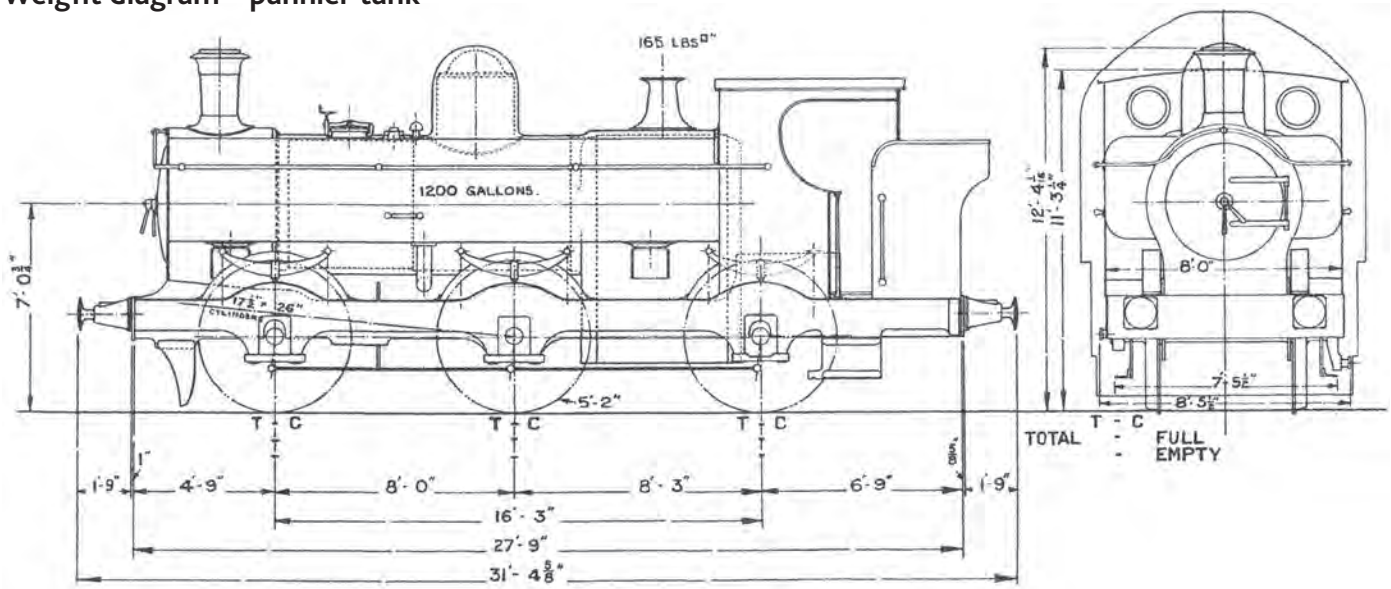

Statistics

No.	Rebuilt	Original No.	Rebuilt as PT	First allocation	Last allocation	Withdrawal	Mileage
322	7/80	322	4/25	B'ham/W'ton area	Tyseley	10/30	800,000+
323	12/79	359	2/25	Hereford (1890s)	Stourbridge	7/32	800,000+
324	12/78	324	–	Pontypool Road	Ferndale	4/21	
325	3/80	337	8/18	B'ham/W'ton area	Stourbridge	3/30	800,000+
326	9/85	326	11/19	B'ham/W'ton area	Stourbridge	10/28	800,000+
327	1/79	336	10/20	B'ham/W'ton area	Stourbridge	3/30	800,000+

Including the mileage run as tender engines before rebuilding as saddle tanks, all except 324 will have run over a million miles in traffic.

Dimensions & Weight Diagram – '645/1501' class

'645' class as built

Cylinders	16in x 24in
Wheel diameter	4ft 6in
Boiler pressure	140 lbs psi
Heating surface	1,300sqft
Grate area	16sqft
Axleload	12½ tons
Total weight	34 tons 14 cwt
Tank capacity	980 gallons
Tractive effort (85%)	13,540 lbs

'1501' class as built

As above, except:

Cylinders	17in x 24in
Wheel diameter	4ft 7 ½ in

Heating surface	1,145sqft
Tank capacity	1,120 gallons
Axleload	13 tons 5 cwt
Total weight	39 tons 8 cwt

Rebuilt with Swindon (S4) boiler

As above, except

Boiler pressure	150 lbs psi
Heating surface	1,306.41sqft
Grate area	16.44sqft
Tank capacity	1,000-1,120 gallons
Axleload	13 tons 18 cwt
Total weight	41 tons 10 cwt
Tractive effort (85%)	15,935 lbs

Rebuilt with pannier tanks and Belpaire (B4) boilers

As above, except

Boiler pressure	165 lbs psi
Heating surface	1,142.6sqft
Grate area	15.45sqft
Tank capacity	1,200 gallons
Axleload	15 tons 6 cwt
Total weight	42 tons 17 cwt (44 tons for superheated engines)
Tractive effort (85%)	17,525 lbs

Weight diagram – saddle tank

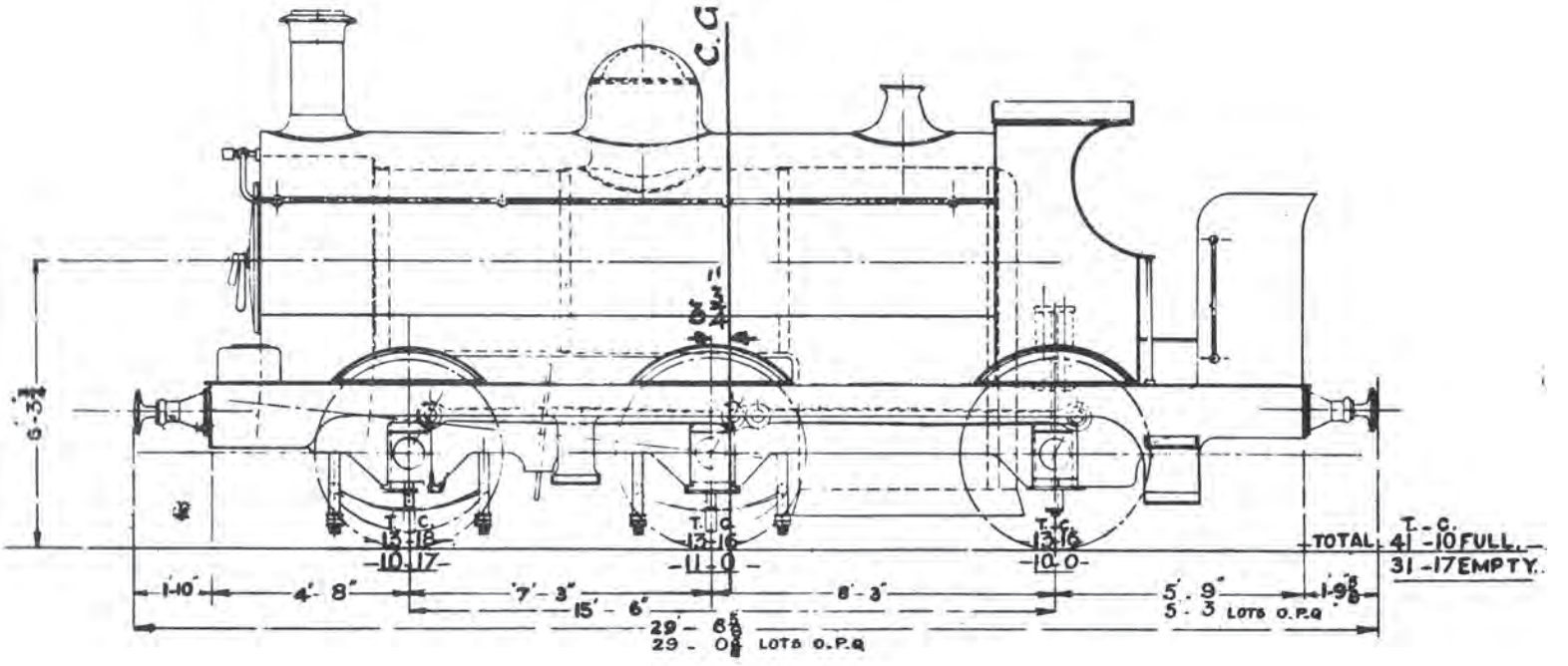

Weight diagram – pannier tank

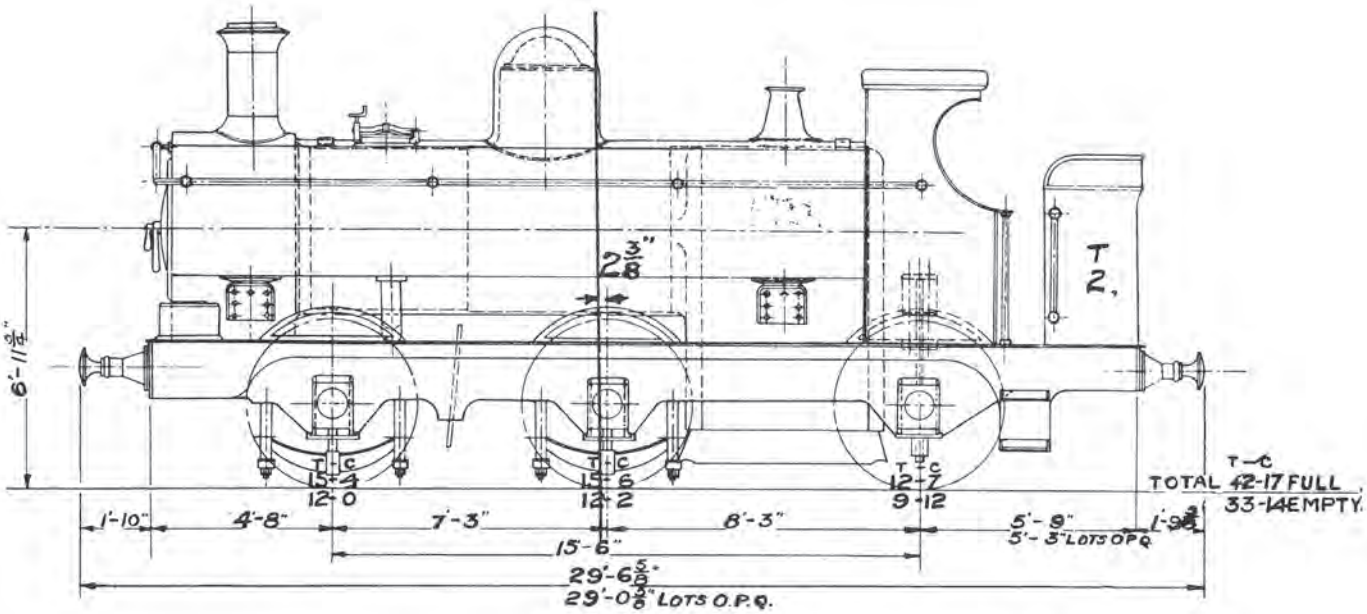

Statistics

enclosed cab fitted
* ATC fitted

No.	Built	Rebuilt as PT	First allocation	Last allocation	Withdrawal	Mileage
645*	4/72	1/14	Southern Division	Didcot	10/32	
646	5/72	10/23	Northern Division	Birkenhead	7/34	
647#	5/72	8/25	Southern Division	Pantyffynnon	5/32	
648	6/72	–	Northern Division	Stourbridge	7/32	
649	6/72	11/23	Southern Division	Neath	7/32	
650#	6/72	12/17	Northern Division	Gloucester	4/30	
651#	7/72	3/21	Northern Division	Neath	5/32	
652	7/72	–	Southern Division	Milford Haven	3/29	
653	8/72	11/23	Southern Division	Goodwick	5/33	
654	8/72	11/20	Northern Division	Wellington	10/28	
655	8/72	–	Sold to Carmarthen & Cardigan Rly		5/76	
656	9/72	10/20	Northern Division	Croes Newydd	2/33	
757	10/72	10/19	Northern Division	Birkenhead	8/33	
758	11/72	9/24	Northern Division	Oxley	1/31	
759	12/72	4/20	Northern Division	Croes Newydd	9/35	
760#	12/72	4/21	Northern Division	Ross-on-Wye	5/32	
761	12/72	5/23	Northern Division	Kidderminster	5/30	
762	1/73	2/20	Northern Division	Duffryn Yard	6/34	
763*	1/73	–	Northern Division	Slough	3/33	
764	2/73	7/13	Northern Division	Banbury	3/30	

No.	Built	Rebuilt as PT	First allocation	Last allocation	Withdrawal	Mileage
765	2/73	8/18	Northern Division	Merthyr	8/32	
766	2/73	2/29	Northern Division	Chester	9/35	
767	3/73	–	Sold to South Wales Mineral Railway		6/75	
768	3/73	11/20	Northern Division	Oxley	9/35	
769	4/73	11/22	Southern Division	Aberdare	4/30	
770#	4/73	3/25	Southern Division	Goodwick	10/36	
771	4/73	12/22	Northern Division	Tyseley	7/29	
772	5/73	–	Northern Division	Croes Newydd	1/34	
773	5/73	11/22	Northern Division	Tyseley	3/29	
774	6/73	11/22	Northern Division	Chester	7/32	
775#	6/73	9/25	Northern Division	Chester	3/33	
902	11/71	1/14	SWM Rly	Pontypool	7/32	ex SWM Rly
903	10/72	11/16	SWM Rly	Danygraig	4/31	ex SWM Rly
904	8/72	9/15	Northern Division	Stafford Road	8/32 ex GW No.767 from SWM	

All locomotives in the '1501' series were allocated to Northern Division depots except 1552.

1501*	3/78	1/25		Tyseley	12/34	
1502*	4/78	12/19		Ross-on-Wye	7/35	
1503	5/78	4/15		Ebbw Junction	5/32	
1504#	5/78	9/27		Stourbridge	11/29	
1505#*	6/78	12/24		Aberdare	1/37	
1506	7/78	3/23		Croes Newydd	12/37	
1507*	7/78	4/21		Stafford Road	6/34	
1508*	8/78	3/23		Croes Newydd	9/36	
1509#*	8/78	10/24		Hereford	10/38	
1510	9/78	7/24		Stourbridge	8/29	
1511*	9/78	3/20		Croes Newydd	1/36	
1512	10/78	10/14		Tyseley	3/29	
1513	11/78	4/20		Hereford	7/30	
1514	11/78	12/23		Wellington	12/34	
1515	12/78	–		Bala	6/29	
1516	12/78	2/25		Croes Newydd	6/31	
1517	12/78	4/25		Tyseley	8/28	
1518*	12/78	12/20		Stourbridge	9/34	
1519*	1/79	9/30		Wellington	7/35	
1520	2/79	9/19		Gloucester	5/29	
1521*	2/79	12/24		Ebbw Junction	12/32	
1522#*	3/79	7/27		Stourbridge	8/34	auto-fitted 4/31
1523*	4/79	10/23		Croes Newydd	11/37	
1524*	4/79	11/19		Croes Newydd	5/39	
1525#*	5/79	11/25		Weymouth	7/35	
1526*	5/79	2/17		Stafford Road	7/33	
1527*	6/79	12/21		Croes Newydd	7/45	
1528*	7/79	2/22		Stourbridge	2/36	
1529*	7/79	4/21		Wellington	6/33	

No.	Built	Rebuilt as PT	First allocation	Last allocation	Withdrawal	Mileage
1530*	8/79	9/17		Aberdare	12/38	
1531#*	8/79	1/27		Oxford	12/49	
1532*	9/79	9/21		Croes Newydd	7/48	
1533#*	10/79	5/24		Oswestry	7/36	
1534#	10/79	1/25		Pontypool	8/34	
1535	10/79	2/18		Aberdare	4/34	
1536*	11/79	10/22		Stafford Road	6/34	
1537	11/79	8/20		Chester	2/31	
1538*	12/79	8/23		Bristol SPM	11/48	
1539*	12/79	4/21		Croes Newydd	8/38	
1540*	1/80	12/20		Tyseley	8/35	
1541*	2/80	4/20		Yeovil	12/37	
1542*	2/80	2/28		Swindon	2/51	
1543*	3/80	1/22		Worcester	8/32	
1544	3/80	–		Merthyr	2/30	
1545*	4/80	7/29		Birkenhead	11/35	
1546#	4/80	10/22	S.Wales Mineral Rly, No.5, 9/11 – 1/22	Goodwick	12/35	
1547*	5/80	12/20		Stafford Road	11/34	
1548*	6/80	2/22		Oxford	2/37	
1549*	8/80	10/20		Tyseley	7/35	
1550#	7/80	5/20		Worcester	7/29	
1551*	8/80	9/20		Tyseley	9/32	
1552#*	9/80	3/17	Southern Division	Ebbw Junction	10/36	
1553	9/80	1/25		Kidderminster	4/29	
1554*	10/80	9/16		Croes Newydd	11/44	
1555	10/80	10/25		Pontypool	7/29	
1556	10/80	–		Croes Newydd	9/32	
1557#*	11/80	11/22		Bristol SPM	1/38	
1558*	11/80	2/21		Croes Newydd	9/38	
1559	12/80	–		Wellington	8/29	
1560	12/80	5/24		Wellington	1/29	
1801	1/81	5/20		Aberbeeg	9/36	
1802	2/81	3/22		Chester	8/37	
1803*	2/81	1/23		Stourbridge	12/44	
1804*	3/81	10/26		Swindon	2/31	
1805	3/81	4/22		Croes Newydd	7/30	
1806*	4/81	10/26	S.Wales Mineral Rly No.3, 2/10 – 1/22	Swansea E Dock	11/38	
1807#	4/81	7/25		Gloucester	9/28	
1808	5/81	11/25		Stafford Road	6/45	
1809*	5/81	11/25		Stafford Road	5/36	
1810	6/81	9/19		Tyseley	12/44	
1811#	7/81	3/25	S.Wales Mineral Rly No.1, 4/10 – 1/22	Duffryn Yard	6/28	
1812*	7/81	5/20		Tyseley	4/37	

Dimensions & Weight Diagram – '850' class

Saddle tanks as built from 1874

Cylinders	15in x 24in
Wheel diameter	4ft 0in
Boiler pressure	140lbs psi
Heating surface	914sqft
Grate area	12.33sqft
Tank capacity	644 gallons
Weight	30 tons 16 cwt
Axleload	10 tons 18 cwt
Tractive effort	13,387 lbs

As reboilered from 1894

Cylinders	16in x 24in
Wheel diameter	4ft 1½in
Boiler pressure	150 lbs psi
Heating surface	1.015.06sqft
Grate area	11.16sqft
Tank capacity	870 gallons
Weight	35 tons approx
Tractive effort	15,825 lbs

As rebuilt with pannier tanks

As above except:

Boiler pressure	165 lbs psi
Heating surface	947.14sqft
Tank capacity	800 gallons
Weight	36 tons 3 cwt
Axleload	13 tons 5 cwt

Weight diagram – saddle tank

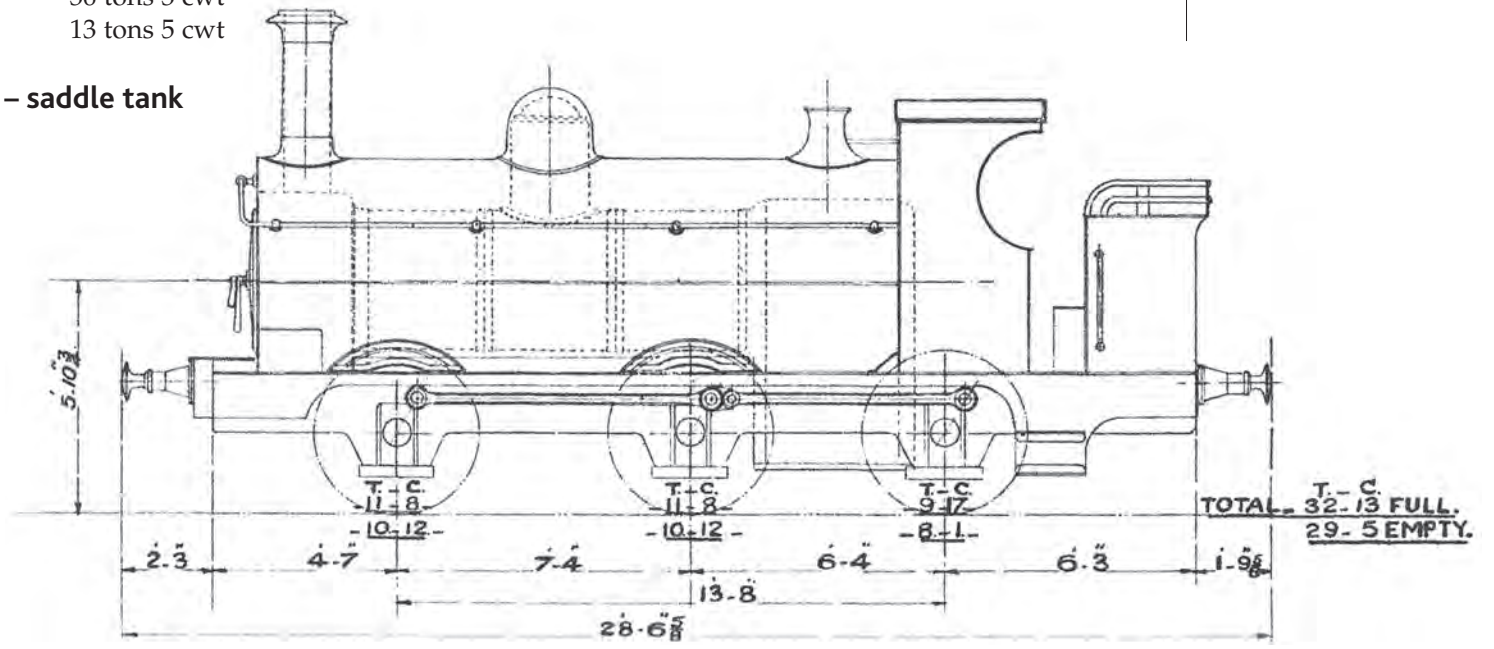

Weight diagram – pannier tank

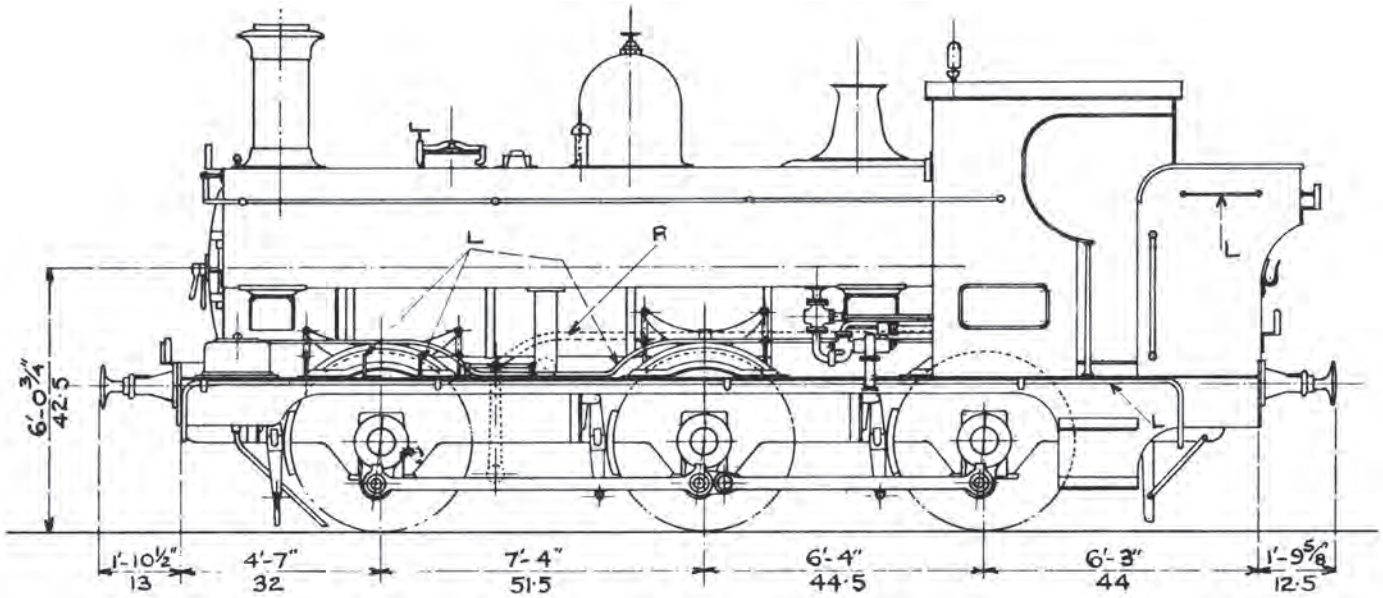

Statistics

No.	Built	Rebuilt as PT	Last allocation	Withdrawal	Remarks
93	11/75*	7/21	Hereford	2/31	* rebuilt from 1860 Gooch 0-6-0ST
94	2/77*	3/27	Swindon	7/32	* rebuilt from 1860 Gooch 0-6-0ST
850	2/74	3/13	Newport Pill	12/34	
851	5/74	8/13	Swindon	3/31	
852	6/74	6/11	Old Oak Common	4/31	
853	6/74	11/13	Penzance	6/30	
854	6/74	12/26	Taunton	2/35	
855	7/74	–		6/06	Sold
856	7/74	10/24	Chester	5/32	
857	8/74	3/21	Shrewsbury	11/33	
858	8/74	1/20	Worcester	3/31	
859	9/74	3/20	Sandy	12/34	
860	9/74	2/11	Whitland	8/28	
861	10/74	1/12	Burry Port	7/32	
862	10/74	12/24	Birkenhead	4/32	
863	11/74	10/27	Taunton	5/32	
864	11/74	–		12/12	
865	12/74	3/16	Shrewsbury	10/33	
866	12/74	8/26	Weymouth	7/32	
867	1/75	12/22	Exeter	11/33	
868	2/75	8/22	Bristol SPM	9/35	
869	3/75	8/27	Bristol SPM	10/34	
870	4/75	9/27	Taunton	11/34	
871	4/75	12/11	Ebbw Junction	7/31	

No.	Built	Rebuilt as PT	Last allocation	Withdrawal	Remarks
872	5/75	12/12	Llanelli	9/36	
873	5/75	–		12/12	Sold
987	6/75	3/24	Stourbridge	4/36	
988	7/75	10/12	Sandy	11/28	
989	8/75	5/13	Danygraig	4/36	
990	9/75	–	Hereford	3/31	
991	9/75	–	Llanelli	2/31	
992	9/75	10/23	Swindon	2/51	
993	10/75	12/23	Newport Pill	9/30	
994	11/75	8/25	Swindon	6/30	
995	11/75	4/25	Bristol SPM	3/31	
996	12/75	6/22	Ebbw Junction	2/31	
997	1/76	9/12	Sandy	12/34	
998	2/76	3/28	Hereford	7/32	
1216	9/76	–	Worcester	6/30	
1217	10/76	5/13	Old Oak Common	4/32	
1218	12/76	9/13	Carmarthen	7/29	
1219	12/76	8/22	Llanelli	7/32	
1220	1/77	7/26	Worcester	11/38	
1221	12/76	1/11	Whitland	1/32	
1222	1/77	3/25	Sandy	10/33	
1223	2/77	11/27	St Blazey	7/35	
1224	2/77	2/20	Bristol Bath Road	3/32	
1225	3/77	9/27	St Blazey	7/38	
1226	3/77	12/25	Newport Pill	1/35	
1227	4/77	3/14	St Blazey	4/38	
1901	8/81	10/25	Old Oak Common	9/29	
1902	9/81	12/27	Swindon	10/43	
1903	9/81	3/23	Carmarthen	6/52	
1904	10/81	–	Birkenhead	12/34	
1905	10/81	12/26	Laira	10/36	
1906	11/81	2/11	Frome	7/32	
1907	11/81	3/11	Burry Port	1/50	
1908	12/81	7/27	Bristol SPM	11/36	
1909	1/82	7/24	Taunton	11/49	
1910	4/82	2/15	Whitland	7/44	
1911	4/82	9/22	Duffryn Yard	5/36	
1912	4/82	3/27	Old Oak Common	12/49	
1913	6/82	–	Worcester	11/29	
1914	7/82	8/24	Birkenhead	6/31	
1915	7/82	2/14	Westbury	8/35	
1916	7/82	10/10	Burry Port	7/28	
1917	8/82	4/24	Birkenhead	3/51	

No.	Built	Rebuilt as PT	Last allocation	Withdrawal	Remarks
1918	8/82	1/20	Llanelli	6/29	
1919	9/82	6/13	Worcester	11/49	
1920	10/82	8/11	Sandy	9/33	
1921	10/82	7/27	Didcot	5/35	
1922	11/82	10/25	Penzance	4/36	
1923	11/82	5/24	Whitland	7/39	Sold
1924	12/82	6/12	Machynlleth	8/38	
1925	12/83	–	Southall	4/51	
1926	1/84	8/24	Llanelli	11/28	
1927	2/84	7/25	Laira	10/29	
1928	3/84	10/12	Cardiff East Dock	12/34	
1929	4/84	4/27	Burry Port	7/35	
1930	5/84	1/24	St Blazey	8/49	
1931	6/84	7/22	Cardiff	12/38	
1932	7/84	–	Laira	4/30	
1933	7/84	–	Swindon	3/28	
1934	8/84	8/22	Swindon	4/28	
1935	8/84	2/13	Oxford	11/53	
1936	9/84	6/28	Burry Port	2/35	
1937	9/86	5/28	Llanelli	12/34	
1938	10/86	9/21	Whitland	7/36	
1939	10/86	–	Worcester	11/29	
1940	11/86	10/23	Llanelli	4/33	
1941	11/86	5/29	Llanelli	2/51	
1942	12/86	1/24	Sandy	12/34	
1943	1/87	4/14	Gloucester	3/51	
1944	1/87	–	Bristol SPM	10/34	
1945	2/87	1/14	Danygraig	11/49	
1946	3/87	11/26	Old Oak Common	1/35	
1947	3/87	11/22	Tyseley	11/38	
1948	3/87	6/29	Sandy	8/34	
1949	2/88	3/23	Birkenhead	4/50	
1950	2/88	9/23	Tyseley	6/34	
1951	3/88	3/20	Stafford Road	10/37	
1952	3/88	1/26	Plymouth Millbay	11/28	
1953	4/88	8/14	Didcot	4/29	
1954	5/88	11/11	Swindon	9/44	
1955	5/88	3/20	Tyseley	8/39	
1956	6/88	12/25	Exeter	12/38	Sold
1957	6/88	10/25	Burry Port	4/51	
1958	7/88	2/31	Oxford	9/36	
1959	8/88	11//20	Birkenhead	11/35	
1960	9/88	5/22	Croes Newydd	4/35	

No.	Built	Rebuilt as PT	Last allocation	Withdrawal	Remarks
1961	10/89	7/27	Sandy	9/36	
1962	10/89	5/12	Kidderminster	2/29	
1963	11/89	–	Worcester	1/43	
1964	11/89	4/26	Whitland	2/52	
1965	12/89	12/13	Machynlleth	1/50	
1966	12/89	5/28	Whitland	7/39	Sold
1967	1/90	2/25	Burry Port	6/51	
1968	2/90	6/25	Birkenhead	9/51	
1969	2/90	12/25	Southall	8/49	
1970	3/90	5/17	Cardiff Eastern Dock	7/38	
1971	3/90	9/23	Cardiff	12/38	
1972	6/90	6/15	Bristol SPM	10/29	
1973	7/90	7/22	Laira	12/49	
1974	7/90	4/15	Pantyffynnon	8/35	
1975	9/90	1/11	Llanelli	9/35	
1976	9/90	9/29	Old Oak Common	11/36	
1977	10/90	9/22	Salisbury	2/31	
1978	10/90	9/15	Burry Port	2/36	
1979	11/90	12/14	Whitland	8/50	
1980	11/90	3/22	Bristol SPM	11/34	
1981	12/90	–	Llanelli	7/28	
1982	1/91	6/25	Llanelli	1/36	
1983	1/91	1/27	Whitland	12/35	
1984	2/91	–	Pontypool	6/28	
1985	2/91	7/25	Laira	7/34	
1986	3/91	12/25	Llanelli	10/29	
1987	3/91	7/15	Old Oak Common	1/29	
1988	5/91	11/25	Llanelli	1/47	
1989	6/91	9/11	Gloucester	9/50	
1990	6/91	7/30	Laira	11/49	
1991	7/91	7/27	Burry Port	1/53	
1992	7/91	9/25	Exeter	3/35	
1993	8/91	12/22	Barry	4/51	
1994	8/91	5/26	Whitland	10/38	
1995	9/91	7/13	Bristol SPM	8/30	
1996	10/91	8/11	Gloucester	1/53	
1997	10/91	7/26	Penzance	5/29	
1998	11/91	12/11	Cardiff	11/34	
1999	11/91	11/25	Exeter	6/46	
2000	12/91	5/23	Abercynon	12/49	
2001	12/91	8/11	Worcester	8/52	
2002	1/92	11/30	Burry Port	2/52	
2003	1/92	5/20	Old Oak Common	5/29	
2004	9/92	3/35	Birkenhead	1/52	
2005	9/92	12/37	Tyseley	12/44	
2006	10/92	12/24	Birkenhead	12/49	

No.	Built	Rebuilt as PT	Last allocation	Withdrawal	Remarks
2007	10/92	–	Worcester	12/49	
2008	11/92	6/22	Birkenhead	3/58	
2009	4/94	12/25	Landore	1/51	
2010	5/94	4/15	Whitland	3/53	
2011	11/94	8/22	Whitland	8/56	
2012	11/94	8/10	Birkenhead	6/58	
2013	12/94	11/10	Whitland	5/50	
2014	12/94	12/23	Swindon,	11/51	
2015	1/95	10/27	Bristol SPM	11/45	
2016	2/95	8/30	Worcester	1/52	
2017	2/95	6/22	Swindon	3/51	
2018	3/95	4/12	Whitland	12/49	
2019	3/95	4/11	Burry Port	12/49	
2020	5/95	10/23	Worcester	12/38	Sold

Dimensions – '1813' class

As built with side tanks

Cylinders	17in x 24in
Wheel diameter	4ft 6in
Boiler pressure	140 lbs psi
Heating surface	1,078sqft
Grate area	16.4sqft
Tank capacity	1,180 gallons
Weight	39 tons 12 cwt
Axleload	13½ tons
Tractive effort	15,285 lbs

As rebuilt with saddle tanks

As above except:

Wheel diameter	4ft 7½ in
Boiler pressure	150 lbs psi
Heating surface	1,307.72sqft
Grate area	17.33sqft
Tank capacity	1,050 gallons
Weight	44 tons 12 cwt
Axleload	15 tons 2 cwt

As rebuilt with pannier tanks

As above except:

Boiler pressure	165-180 lbs psi
Heating surface	1,197.7sqft
Grate area	15.45sqft
Tank capacity	1,200 gallons
Weight	44 tons 8 cwt
Axleload	15¾ tons
Tractive effort	17,525-19,120 lbs

Statistics

All allocated initially to the GW Southern Division
Rebuilt with enclosed cab
* Fitted with ATC 1930/1

No.	Built	Rebuilt as ST	Rebuilt as PT	First allocation	Last allocation	Withdrawal
1813#	9/82	2/97	7/03		Bassaleg	7/28
1814	9/82	7/99	11/05		Duffryn Yard	9/37
1815#	9/82	6/96	7/15		Laira	12/36
1816*	10/82	4/01	5/06		Bridport	11/35
1817#*	10/82	–	12/04		Westbury	10/32
1818*	10/82	1/99	2/19		Pantyffynnon	8/34
1819#*	11/82	9/98	5/24		Laira	1/38
1820#*	11/82	3/00	2/26		Ebbw Junction	4/37
1821#*	11/82	5/00	8/12		Carmarthen	5/33
1822	11/82	8/94	1/22		Bristol Bath Rd	3/30
1823#*	11/82	1/01	11/05		Duffryn Yard	8/44
1824*	12/82	4/01	5/12		Tyseley	6/38
1825	12/82	6/96	10/23	To Rhondda & S'sea Bay Rly, 3/09 – 1/22	Landore	9/28
1826	12/82	1/97	8/11		Carmarthen	10/36
1827#	12/82	5/99	9/14		Merthyr	12/34
1828*	1/83	12/97	2/21		Duffryn Yard	12/34
1829	1/83	11/99	–		Aberdare	12/28
1830#	1/83	3/96	10/11		Severn Tunnel	10/33
1831*	2/83	11/96	4/27		Swindon	5/45
1832#	2/83	8/97	7/19		Reading	4/31
1834#	3/83	6/96	6/20	To Rhondda & S'sea Bay Rly, 4/07 – 1/22	Danygraig	8/29
1835*	3/83	11/95	2/20		Stourbridge	1/49
1836*	3/83	9/97	2/20		Oxford	3/39
1837#*	3/83	6/97	6/25		Landore	8/34
1838*	4/83	10/06	10/23		Merthyr	5/47
1839*	4/83	9/97	2/20		Worcester	9/38
1840#	4/83	4/99	10/18		Laira	3/37
1841#*	4/83	11/00	1/20		Weymouth	12/34
1842#	5/83	10/96	3/25		Bristol SPM	5/28
1843#	5/83	1/98	10/25		Southall	7/29
1844#*	5/83	10/02	12/18		Duffryn Yard	12/35
1845	6/83	12/96	11/16		Kidderminster	8/30
1846*	9/83	8/97	5/20		Llantrisant	7/46
1847#*	10/83	12/96	5/19		Pontypool	5/47
1848#*	10/83	10/98	11/19		Didcot	6/35
1849#*	11/83	3/97	1/26		Pontypool	8/34
1850*	11/83	11/95	5/10	reverted to side tank before rebuilding in 1910	Oxford	9/38
1851#*	12/83	4/09	5/16		Yeovil	9/31
1852	12/83	9/97	2/22		Andover Junction	4/29
1853*	1/84	–	1/12		Leominster	12/34

Dimensions & Weight Diagram – '1661' class

As built in 1886

Cylinders	17in x 26in
Wheel diameter	5ft 0in
Boiler pressure	140 lbs psi
Heating surface	1,157.09sqft
Grate area	15.2sqft
Tank capacity	966 gallons
Weight	45 tons 18 cwt
Axleload	15 tons 14 cwt
Tractive effort	14,902 lbs

As reboilered from 1897

As above except:

Wheel diameter	5ft 2in
Boiler pressure	180 lbs psi
Heating surface	1,197.7sqft
Grate area	15.45sqft
Tractive effort	18,545 lbs

As rebuilt with pannier tanks

As above except:

Tank capacity	1,095 gallons
Weight	46 tons 17 cwt

Weight diagram – pannier tank

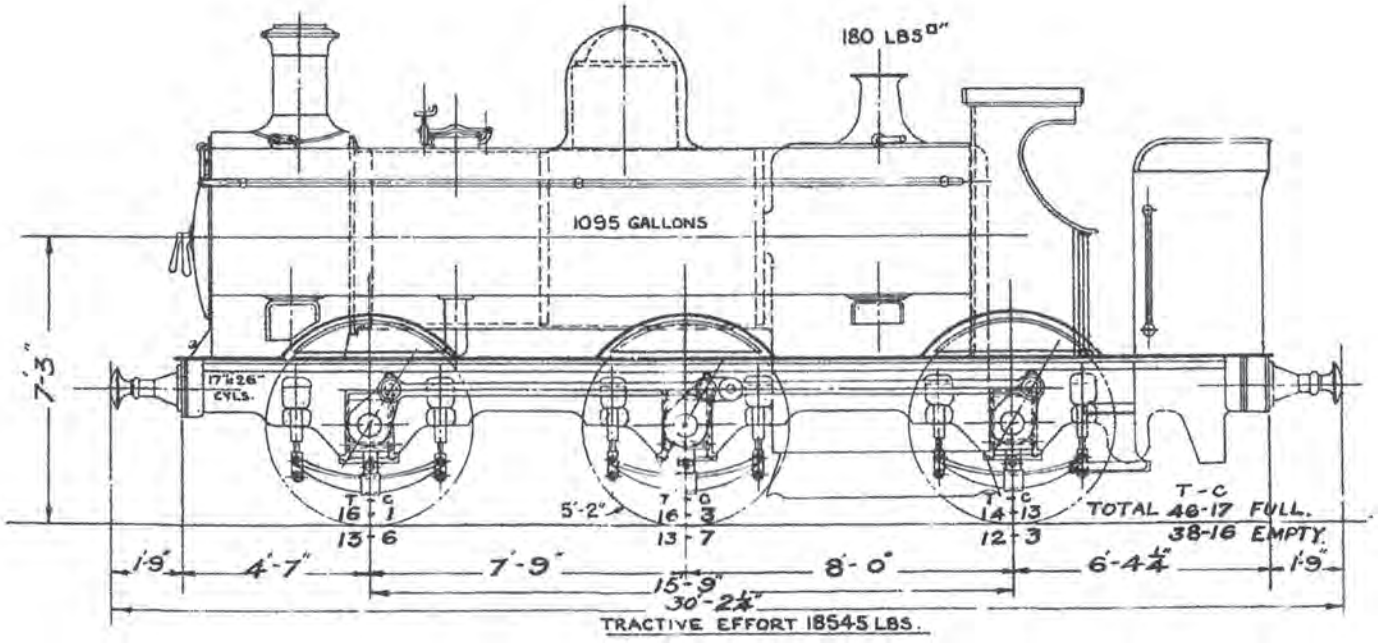

Statistics

enclosed cab

No.	Built	Rebuilt as PT	First allocation	Last allocation	Withdrawal	Remarks
1661#	6/86	8/26		Duffryn Yard	2/30	
1662#	6/86	10/14		Glyn Neath	2/30	
1663#	6/86	8/14		Newport Pill	10/30	
1664#	6/86	12/20		Oxford	8/29	
1665#	7/86	9/16		Tondu	3/31	
1666#	7/86	8/24		Westbury	10/27	
1667#	7/86	1/26	sold to Cardiff Rly, 12/06 – 8/22	Cardiff Docks	8/31	
1668	7/86	–			3/11	
1669#	7/86	2/16		Swansea East Dock	3/29	
1670	8/86	–			1/11	
1671	8/86	–		Neath N&B	10/27	
1672#	8/86	–		Cardiff	5/28	
1673	9/86	11/10		Tyseley	11/28	
1674	9/86	–			1/11	
1675	9/86	6/14		Ebbw Junction	1/29	
1676	10/86	–	sold to Cardiff Rly, 12/06 – 8/22	Swansea East Dock	10/26	
1677	10/86	–			3/15	
1678	10/86	3/15		Southall	10/26	
1679#	11/86	–	sold to Alexandra Docks & Rly, 11/06 – 7/22	Newport Dock St	10/26	
1680	11/86	10/21		Southall	10/26	
1681	11/86	8/16		Reading	7/27	
1682	11/86	1/21		Old Oak Common	12/26	
1683	12/86	4/23	sold to Alexandra Docks & Rly, 11/06 – 7/22	Llantrisant	9/26	
1684#	12/86	2/23		Llantrisant	5/29	
1685	12/86	9/23	sold to Brecon & Merthyr Rly, 2/07 – 9/22		10/34	
1686	12/86	8/12		Ebbw Junction	1/30	
1687#	1/87	11/16		Southall	4/29	
1688#	1/87	2/26		Oxford	4/30	
1689#	1/87	3/26	sold to Cardiff Rly, 12/06 – 8/22	Cardiff	4/31	
1690	2/87	9/12		Tyseley	3/28	
1691	2/87	2/11		Newport Pill	11/27	
1692	2/87	–			3/11	
1693#	3/87	8/24	sold to Brecon & Merthyr Rly, 11/06 – 9/22		4/31	
1694	4/87	10/23	sold to Brecon & Merthyr Rly, 11/06 – 9/22		12/26	
1695	4/87	2/22		Danygraig	10/27	
1696	5/87	3/23		Southall	4/30	
1697	6/87	4/12		Ebbw Junction	5/29	
1698#	6/87	11/24		Cardiff	11/27	
1699	6/87	12/22		Newport Pill	9/26	
1700	6/87	10/20		Danygraig	3/30	

Dimensions & Weight Diagram – '1854' class

As built from 1890

Cylinders	17in x 24in
Wheel diameter	4ft 6in
Boiler pressure	150 lbs psi
Heating surface	1,370.7sqft
Grate area	17.2sqft
Tank capacity	1,080 gallons (1854-1893)
	1,100 gallons (1701-1740)
	1,200 gallons (1751-1770)
Weight	43 tons 8 cwt
Axleload	15 tons

As reboilered from 1900

As above except:

Wheel diameter	4ft 7½ in
Boiler pressure	180 reduced later to 165 lbs psi
Weight	44 tons 5 cwt
Axleload	15 tons 9 cwt
Tractive effort	19,120 reduced to 17,525 lbs

As rebuilt with pannier tanks

As above except:

Heating surface	1,197.7sqft
Grate area	15.45sqft
Tank capacity	1,200 gallons
Weight	45 tons 12 cwt
Axleload	16 tons 6 cwt

Weight diagram – saddle tank

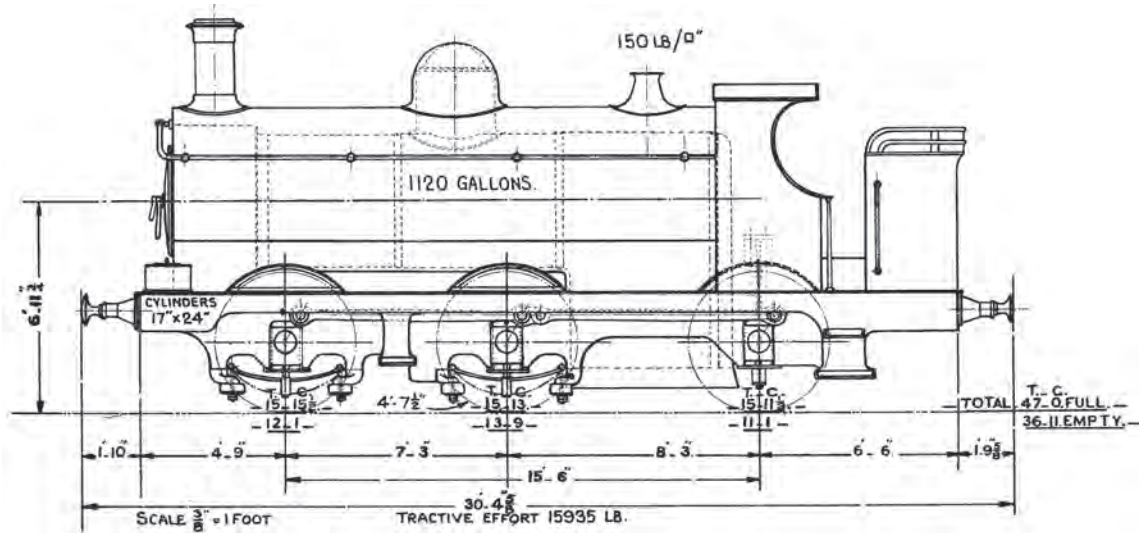

Weight diagram – pannier tank

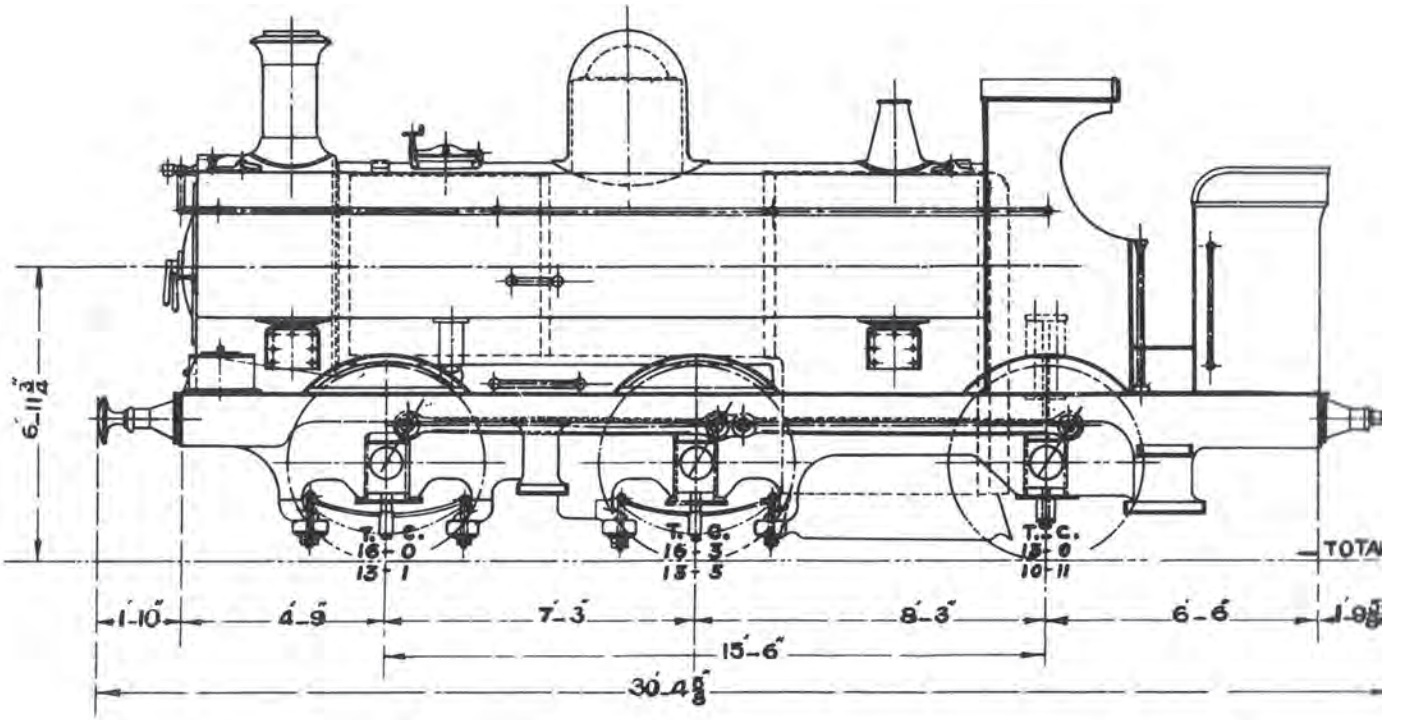

Statistics

1854-1893 & 1701-1770 built with S2 boilers (front dome, flush top)
* rebuilt with Belpaire B2 boiler
$ spark arresting chimney fitted in Second World War
+ auto fitted
# enclosed cab

No.	Built	Rebuilt as PT	Last allocation	Withdrawal	Remarks
1854	1/90	11/23	Duffryn Yard	12/44	
1855#	2/90	7/21	Neath	12/50	
1856	2/90	5/19	Newport Pill	11/45	
1857#	2/90	2/13	Old Oak Common	1/31	
1858#	3/90	4/24	Neath	10/50	
1859	3/90	6/28	Neath	7/46	
1860	3/90	12/14	Yeovil	12/34	
1861*$#	3/90	4/25	Didcot	11/51	
1862	3/90	9/15	Ebbw Junction	12/50	
1863	3/90	4/20	Stafford Road	9/49	
1864	4/90	11/09	Worcester	8/35	
1865#	4/90	9/25	Llanelli	11/33	
1866	4/90	4/14	Duffryn Yard	11/46	

No.	Built	Rebuilt as PT	Last allocation	Withdrawal	Remarks
1867	4/90	1/12	Duffryn Yard	11/48	
1868	4/90	5/05	Cardiff	2/39	
1869#	4/90	11/20	Stafford Road	12/34	
1870	5/90	5/16	Bridgend	10/50	
1871	5/90	8/14	Llanelli	9/28	
1872	5/90	9/15	Oxford	4/35	
1873	5/90	8/11	Cathays	11/45	
1874	10/90	2/12	St Blazey	11/31	
1875*#	11/90	2/13	Newport Pill	11/45	
1876	11/90	5/13	Newton Abbot	2/36	
1877	11/90	1/12	Southall	11/35	
1878	11/90	6/20	Merthyr	11/49	
1879*	11/90	–	Llanelli	9/28	
1880*	11/90	12/11	Reading	4/35	
1881#	12/90	11/18	Yeovil	12/36	
1882	12/90	5/23		12/46	sold to Neath & Brecon Rly, 3/08 – 10/22
1883	12/90	11/19	Ebbw Junction	12/47	
1884*#	12/90	9/15	Cardiff East Dock	8/49	
1885#	12/90	8/16	Reading	11/28	
1886	12/90	9/14	Newport Pill	6/45	
1887	12/90	1/21	Merthyr	7/45	
1888#	1/91	9/11	Cardiff East Dock	12/49	
1889	1/91	8/11	Cardiff	12/48	
1890#	1/91	7/12	Newport Pill	6/47	
1891	2/91	4/20	Cardiff	12/49	
1892	2/91	6/29	Stafford Road	4/36	
1893	2/91	6/14	Neath	11/45	
1701#	2/91	6/20	Cardiff	7/28	
1702	3/91	7/22	Truro	9/38	
1703	3/91	2/13	Swindon	7/45	
1704#	3/91	12/14	Duffryn Yard	1/35	
1705	3/91	5/18	Cardiff East Dock	11/50	
1706#	3/91	3/15	Croes Newydd	6/48	
1707	4/91	12/27	Cardiff East Dock	7/47	
1708#	4/91	10/19	Severn Tunnel Jcn	1/35	
1709#	4/91	11/13	Newport Pill	11/50	
1710#	4/91	10/24	Yeovil	2/37	transfer to Swansea & Rhondda Bay Rly, 1/09 – 10/22
1711	4/91	5/10	Pontypool	6/28	
1712	5/91	9/10	Birkenhead	1/46	
1713#	5/91	5/25	Ebbw Junction	6/48	
1714	5/91	9/22	Cardiff	7/46	
1715	5/91	6/23		10/49	sold Neath & Brecon Rly, 1/14 – 10/22
1716	5/91	12/20	Aberdare	5/47	

No.	Built	Rebuilt as PT	Last allocation	Withdrawal	Remarks
1717	6/91	12/22	Exeter	12/36	
1718	6/91	10/20	Merthyr	10/36	
1719#	6/91	9/11	Llanelli	11/45	
1720	6/91	10/10	Ebbw Junction	12/49	
1721#	5/92	3/18	Merthyr	7/46	
1722	5/92	8/14	Llantrisant	11/46	
1723#	5/92	10/14	Ebbw Junction	1/35	
1724	5/92	12/15	Worcester	11/29	
1725#	6/92	6/16	Tondu	10/46	
1726	6/92	2/19	Newport Pill	4/48	
1727*#	6/92	6/17	Neath	5/35	
1728+	6/92	8/10	Newton Abbot	2/32	
1729	7/92	7/22	Yeovil	9/42	Bomb damaged
1730#	7/92	6/16	Tondu	8/48	
1731#	7/92	6/15	Swindon	6/49	
1732	7/92	8/14	Llanelli	7/46	
1733*	8/92	10/14	Duffryn Yard	6/36	
1734	8/92	4/16	Ebbw Junction	2/46	
1735	8/92	3/16	Ebbw Junction	7/46	
1736	8/92	1/24	Newton Abbot	4/45	
1737	8/92	12/15	Ebbw Junction	11/45	
1738	9/92	6/19	Truro	2/39	
1739	9/92	1/25	Stafford Road	3/31	
1740*	9/92	10/12	Danygraig	11/44	
1751	10/92	8/32	Newton Abbot	11/45	
1752	10/92	9/22	Stourbridge	3/50	
1753	10/92	6/12	Truro	4/48	
1754#	10/92	4/14	Duffryn Yard	12/49	
1755	11/92	11/22	Laira	4/36	
1756#	11/92	2/18	Danygraig	7/46	transfer to Rhondda & Swansea Bay Rly, 5/08 – 1/22
1757#	11/97	2/21	Truro	3/31	
1758	11/92	1/18	Swindon	3/49	
1759#	11/92	7/12	Ebbw Junction	11/45	
1760#	12/92	12/29	St Blazey	7/50	1,156,329 miles in traffic
1761*	12/92	11/23	Newton Abbot	12/46	
1762	12/92	7/17	Oxley	4/48	
1763	12/92	11/25	Stourbridge	11/46	
1764#	12/92	9/10	Newport Pill	10/49	
1765#	1/93	11/19	Southall	11/38	
1766	1/93	8/12	Stafford Road	6/38	
1767	1/93	3/13	Yeovil	12/47	
1768	1/93	7/18	Duffryn Yard	12/47	
1769	2/93	8/19	Aberdare	4/48	
1770#	2/93	10/20	Tyseley	5/36	

No.	Built	Rebuilt as PT	Last allocation	Withdrawal	Remarks
Built with S4 boilers (Back dome, flush top)					
905	5/95	3/19	Newport Pill	11/47	
906	5/95	4/24	Neath	4/48	
907$#	5/95	3/11	Didcot	3/51	
1791	5/95	10/18	Cardiff	1/35	
1792	5/95	4/17	St Blazey	11/45	
1793#	5/95	2/21	Stourbridge	11/45	
1794	6/95	8/12	Truro	12/46	
1795#	6/95	3/14	Newton Abbot	6/47	
1796#	6/95	7/15	Evesham	2/47	
1797	6/95	12/22	St Blazey	7/46	
1798	6/95	1/17	Neath	7/46	
1799#	6/95	10/19	Laira	12/49	
1800	7/95	7/18	Ebbw Junction	12/47	
1894#	7/95	1/10	Ebbw Junction	2/49	
1895#	7/95	7/19	Yeovil	5/47	
1896	7/95	1/13	Newport Pill	12/49	
1897	7/95	11/22	Cardiff East Dock	1/49	
1898	7/95	2/16	Hereford	4/45	
1899	8/95	11/11	Taunton	1/45	
1900	8/95	8/19	St Blazey	4/48	

Dimensions – '655' class

As built

Cylinders	17in x 24in
Wheel diameter	4ft 6in (4ft 7½in for 2701 series)
Boiler pressure	140 lbs psi
Heating surface	1,228sqft
Grate area	15.16sqft
Tank capacity	1,000 gallons
Axleload	13 tons 18 cwt (14 tons 6 cwt for 2701 series)
Total weight	41 tons 4 cwt (42 tons 5 cwt for 2701 series)
Tractive effort (85%)	15,285 lbs

As rebuilt with Belpaire boiler and pannier tanks

As above, except

Wheel diameter	4ft 7½in
Boiler pressure	165 lbs psi
Heating surface	1,197.7sqft
Grate area	15.45sqft
Tank capacity	1,200 gallons
Axleload	15 tons 5 cwt
Total weight	42 tons 18 cwt
Tractive effort (85%)	17,525 lbs

Statistics

enclosed cabs fitted
* NOT fitted with ATC

No.	Built	Rebuilt as PT	First allocation	Last allocation	Withdrawal	Mileage
655	2/92	9/20	Northern Division	Wellington	3/29	
767	2/92	3/21	Northern Division	Croes Newydd	10/34	
1741	3/93	7/19	Northern Division (Sold 1/39, Amalgamated Anthracite Collieries, Gwaun Cae Gurwen 1952)	Kington	12/38	
1742	3/92	7/20	Northern Division	Oxford	2/50	
1743	4/92	2/20	Northern Division	Oxford	2/45	
1744	4/92	3/21	Northern Division	Trawsfynydd	7/38	
1745	5/92	11/19	Northern Division	Stourbridge	8/48	
1746#	6/92	5/15	Northern Division	Leominster	6/46	
1747#	6/92	10/27	Northern Division	Croes Newydd	5/50	
1748	7/92	10/27	Northern Division	Wellington	2/46	
1749	7/92	11/20	Northern Division	Stourbridge	10/48	
1750	8/92	9/20	Northern Division	Tyseley	6/46	
1771	12/92	12/17	Northern Division	Stourbridge	1/37	
1772#*	12/92	8/14	Northern Division	Wellington	3/29	
1773#	1/93	3/27	Northern Division	Croes Newydd	3/50	
1774	2/93	3/24	Northern Division	Tyseley	10/32	
1775#	2/93	1/18	Northern Division	Weymouth	10/38	
1776	3/93	2/22	Northern Division	Stourbridge	6/38	
1777*	3/93	12/23	Northern Division	St Blazey	7/41	
1778*	4/93	–	Northern Division	Croes Newydd	10/28	
1779#	5/93	5/26	Northern Division	Croes Newydd	1/45	
1780	5/93	2/21	Northern Division	Croes Newydd	8/48	
1781#*	6/93	2/19	Northern Division	Reading	4/29	
1782	8/93	5/20	Northern Division	Truro	11/50	
1783#	9/93	4/26	Northern Division	Wellington	1/40	
1784	10/93	2/18	Northern Division	Croes Newydd	2/45	
1785	10/93	2/21	Northern Division	Oxford	9/46	
1786	11/93	10/14	Northern Division	Weymouth	11/45	
1787	11/93	5/16	Northern Division	Oswestry	1/47	
1788	2/94	2/19	Northern Division	Croes Newydd	11/45	
1789#	5/94	11/17	Northern Division	Weymouth	10/50	1,069,716
1790	6/94	5/14	Northern Division	Croes Newydd	6/46	
2701	1/96	6/20	Northern Division	Tondu	11/45	
2702	2/96	11/21	Northern Division	Bristol SPM	1/50	
2703	2/96	6/20	Northern Division	Bristol SPM	11/45	
2704	3/96	3/30	Northern Division	Croes Newydd	3/50	

No.	Built	Rebuilt as PT	First allocation	Last allocation	Withdrawal	Mileage
2705	3/96	3/20	Northern Division	Cardiff East Dock	2/45	
2706	4/96	7/22	Southern Division	Stourbridge	10/48	
2707	5/96	7/12	Northern Division	Pantyffynnon	7/50	
2708#	6/96	7/25	Northern Division	Taunton	7/49	
2709	6/96	5/20	Northern Division	Bristol Bath Road	9/48	
2710	6/96	8/14	Southern Division	Swindon	11/45	
2711	7/96	5/20	Northern Division	Trawsfynydd	11/45	
2712	8/96	10/14	Northern Division	Stourbridge	3/50	
2713	9/96	5/17	Northern Division	Croes Newydd	9/49	
2714	9/96	5/17	Northern Division	Leominster	5/48	
2715#	10/96	4/20	Northern Division	Duffryn Yard	7/50	
2716	11/96	3/24	Northern Division	Croes Newydd	9/50	
2717	11/96	12/24	Northern Division	Croes Newydd	10/48	
2718	12/96	2/17	Northern Division	Tyseley	10/45	
2719	12/96	4/23	Northern Division	Croes Newydd	11/50	
2720	2/97	11/21	Northern Division	Shrewsbury	11/45	

Dimensions & Weight Diagram – '2721' class

As built from 1897

Cylinders	17in x 24in
Wheel diameter	4ft 7½in
Boiler pressure	150 lbs psi
Heating surface	1,307.7sqft
Grate area	17.33sqft
Tank capacity	1,120 gallons
Weight	47 tons
Axleload	15¾ tons
Tractive effort	18,575 lbs

As rebuilt with pannier tanks

As above except:

Boiler pressure	180 lbs psi
Heating surface	1,197.7sqft
Grate area	15.45sqft
Tank capacity	1,200 gallons
Weight	45 tons 13 cwt
Axleload	16 tons 2 cwt
Tractive effort	19,120 lbs

Weight diagram – saddle tank

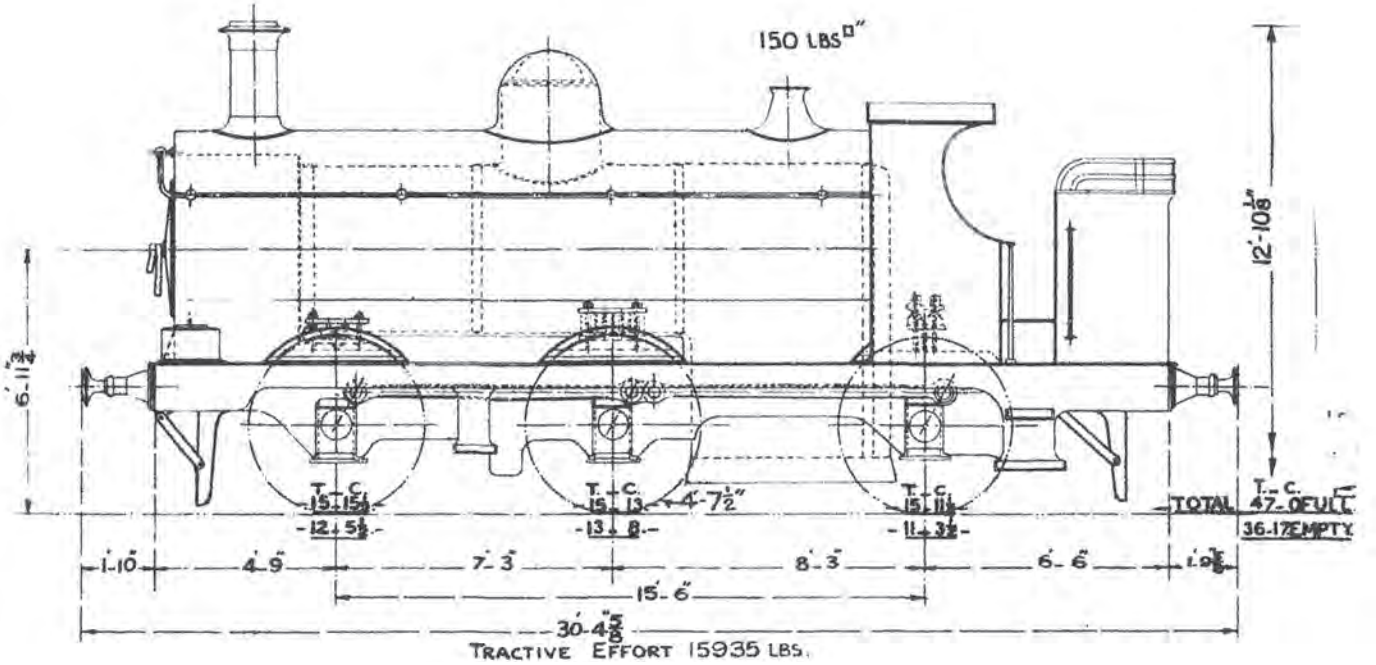

Weight diagram – pannier tank

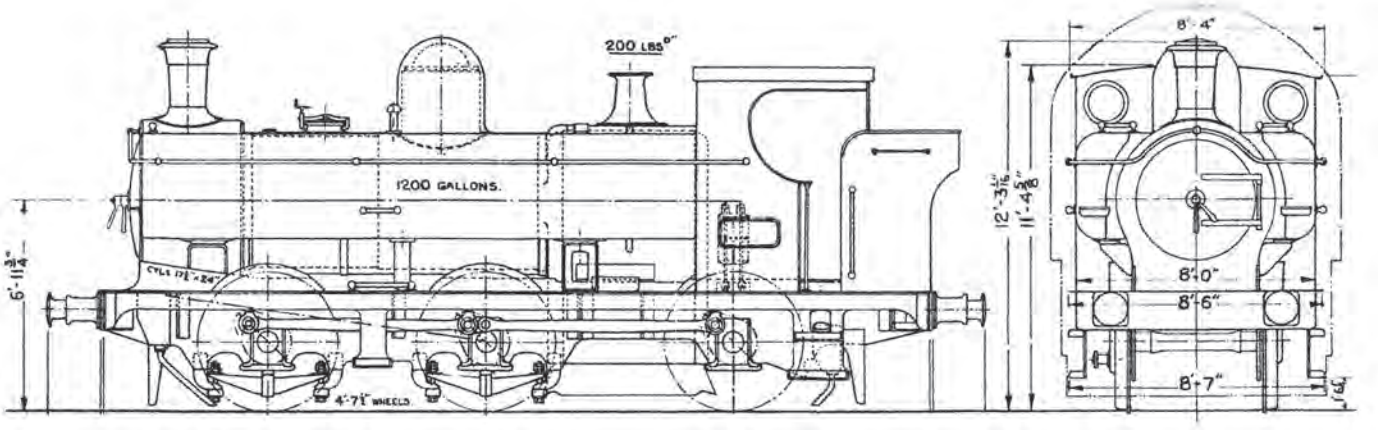

Statistics

$ spark arrester chimneys in Second World War
# enclosed cab fitted

No.	Built	Rebuilt as PT	Last allocation	Withdrawal	Remarks
2700#	see 2800				
2721#	11/97	11/22	Duffryn Yard	8/50	
2722#	3/98	1/26	Neath	11/50	
2723	3/98	9/16	Swindon	8/47	
2724#	3/98	11/16	Cardiff East Dock	2/49	
2725#	3/98	9/22	Truro	1/46	
2726	4/98	11/15	Ebbw Junction	8/47	
2727#	4/98	9/17	Cardiff East Dock	11/45	
2728	5/98	5/15	Pontypool	4/48	
2729#	5/98	9/20	Tondu	3/46	
2730	5/98	9/15	Llanelli	4/48	
2731#	5/98	2/20	Swindon	10/47	
2732	6/98	4/19	Merthyr	10/45	
2733	6/98	6/27	Swindon	11/47	
2734#	7/98	3/14	Newport Pill	8/48	
2735#	7/98	10/16	Swindon	8/47	
2736#	8/98	9/16	Llanelli	8/47	
2737#	8/98	11/26	Penzance	11/47	
2738	8/98	8/12	Newport Pill	12/49	
2739	9/98	6/12	Pontypool	5/48	
2740#	9/98	10/20	Truro	11/45	
2741#	4/99	5/14	Swansea East Dock	10/45	
2742#	4/99	8/15	Merthyr	10/45	
2743#	4/99	6/33	Shrewsbury	10/50	
2744	4/99	12/21	Croes Newydd	11/50	
2745	5/99	8/10	Shrewsbury	1/50	
2746#	5/99	2/23	Llanelli	7/48	
2747	5/99	7/11	Slough	11/45	
2748	5/99	4/23	Taunton	4/48	
2749#	5/99	4/15	Pontypool	4/48	
2750#	6/99	6/15	Treherbert	11/45	
2751#	6/99	4/26	Llanelli	4/48	
2752#	6/99	11/12	Penzance	3/48	
2753	7/99	11/23	Banbury	11/45	
2754#	7/99	10/10	Cardiff East Dock	10/50	
2755#	7/99	7/26	Taunton	8/48	
2756#	8/99	10/11	Gloucester	5/49	
2757#	8/99	7/11	Southall	2/50	
2758#	8/99	4/18	Wellington	12/45	
2759	8/99	8/11	Cardiff	10/45	
2760	8/99	3/16	Merthyr	10/50	

No.	Built	Rebuilt as PT	Last allocation	Withdrawal	Remarks
2761	3/00	3/13	Bridgend	3/50	
2762	3/00	7/16	Tondu	7/46	
2763#	3/00	6/12	Danygraig	11/45	
2764	3/00	5/10	Newport Pill	7/48	
2765	3/00	1/17	Slough	11/45	
2766#	8/00	4/18	Merthyr	11/45	
2767	8/00	7/21	Pontypool	1/49	
2768#	9/00	8/09	St Blazey	10/47	
2769#	9/00	8/14	Bridgend	3/49	
2770#	9/00	4/18	Cardiff	11/45	
2771	9/00	5/09	Stourbridge	6/50	
2772	9/00	7/12	Leamington	11/49	
2773	9/00	2/19	Bridgend	1/46	
2774	9/00	12/16	Evesham	4/48	
2775#	10/00	11/25	Duffryn Yard	7/46	
2776	10/00	5/15	Laira	4/48	
2777#	10/00	4/23	Neath	5/47	
2778	10/00	4/17	Chester	7/47	
2779#	10/00	2/28	Yeovil	11/45	
2780#	10/00	3/15	St Blazey	7/50	
2781	1/01	9/15	Cardiff East Dock	6/48	
2782#	1/01	7/15	Pantyffynnon	2/46	
2783$	1/01	10/13	Didcot	11/47	
2784$#	1/01	11/16	Didcot	5/47	
2785	1/01	5/11	Newton Abbot	4/48	
2786	1/01	8/14	Bristol SPM	12/49	
2787#	1/01	7/18	Pantyffynnon	12/49	
2788	1/01	2/13	Tondu	6/47	
2789#	2/01	7/24	Swansea East Dock	5/49	
2790	2/01	11/26	Southall	6/50	
2791	2/01	2/21	Stafford Road	4/50	
2792	2/01	9/22	Duffryn Yard	6/50	
2793#	2/01	10/13	Newport Pill	1/48	
2794	2/01	2/16	Ebbw Junction	11/49	sold to Lilleshall Co. Shropshire 10/50
2795	2/01	8/11	Ebbw Junction	1/49	
Built with Belpaire B4 boilers					
2796	2/01	3/04	Whitland	11/45	short panniers 3/04 – 5/09
2797	3/01	10/11	Neath	6/48	
2798	3/01	1/28	Duffryn Yard	11/49	
2799#	3/01	1/25	Worcester	3/50	
2800	3/01	7/18	Neath	11/45	renumbered 2700, 12/12

Dimensions & Weight Diagram – '2021' class

As built from 1897 (2021 – 2100)

Cylinders	16 ½ in x 24in
Wheel diameter	4ft 1½in
Boiler pressure	150 lbs psi
Heating surface	1,018.75sqft
Grate area	14.5sqft
Tank capacity	1,000 gallons
Weight	40 tons 14 cwt
Axleload	13 tons 12½ cwt
Tractive effort	16,830 lbs

As built from 1902 (2101 – 2160)

As above except:

Boiler pressure	165 lbs psi
Heating surface	1,054.13sqft
Weight	41 tons 9 cwt
Axleload	14 tons 6 cwt
Tractive effort	18,515 lbs

As rebuilt with pannier tanks

As above except:

Heating surface	994.47sqft
Tank capacity	900 gallons
Weight	38 tons
Axleload	13 tons 17 cwt

Weight diagram – saddle tank

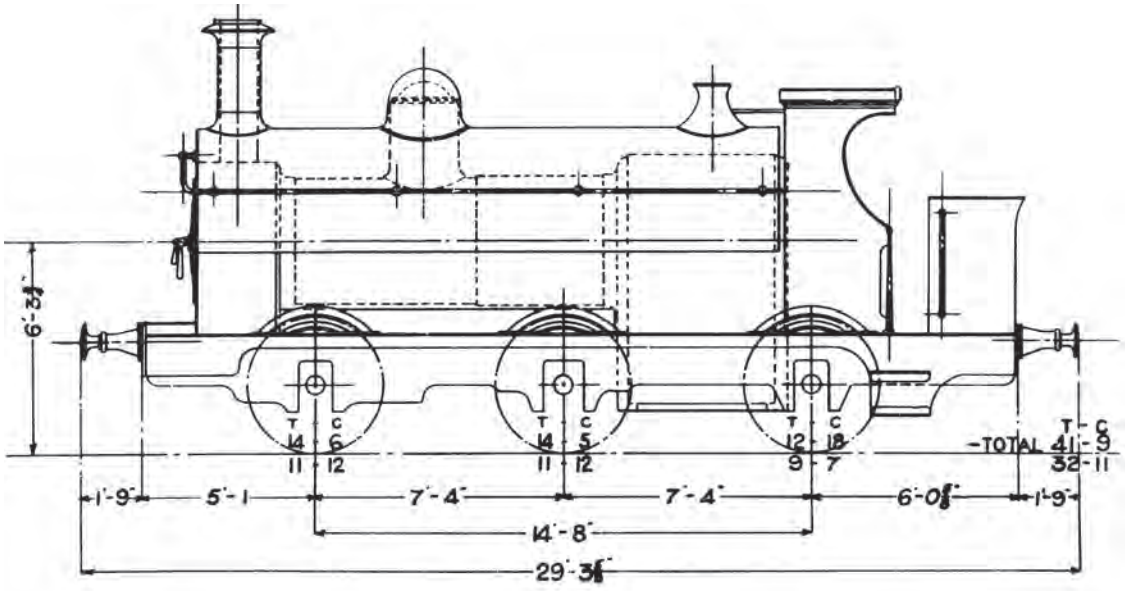

Weight diagram – pannier tank

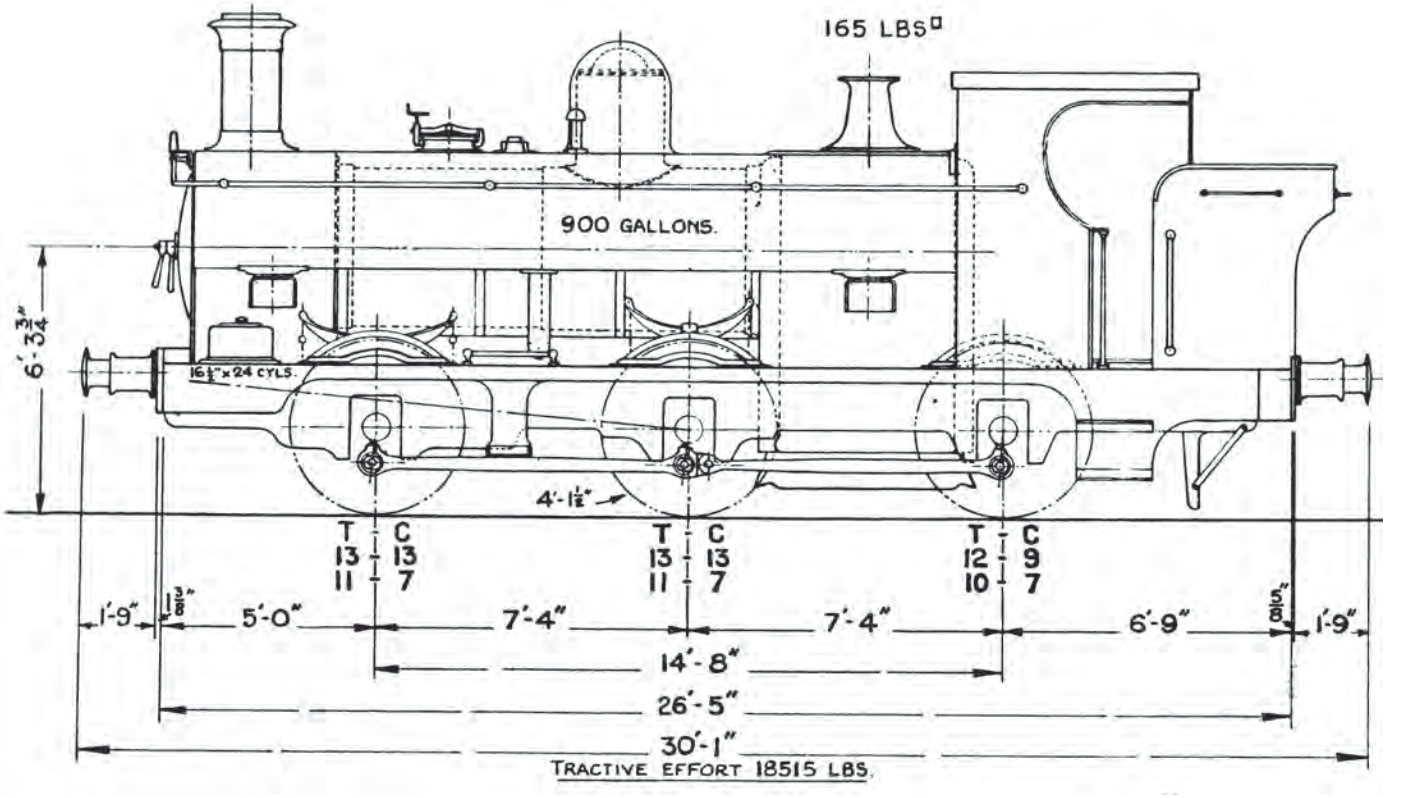

Statistics

* Fitted with auto-train equipment between 1915 and 1930
+Fitted with ATC equipment, from 1931
Fitted with enclosed cabs
$ Fitted with spark arresting chimneys

No.	Built	Rebuilt as PT.	Last allocation	Withdrawal	Mileage
2021#	2/97	12/36	Pontypool	6/51	
2022#	3/97	4/28	Cardiff East Dock	12/49	
2023#	4/97	4/25	Westbury	1/52	
2024#	4/97	10/20	Hereford	3/39	
2025#	5/97	3/23	Gloucester	5/52	
2026	5/97	9/22	Hereford	4/51	
2027	6/97	8/23	Burry Port	2/57	
2028	6/97	–	Stafford Road	9/38	
2029#	7/97	8/24	Llanelli	11/49	
2030	8/97	7/16	Wellington	2/52	
2031#	9/97	1/23	Bristol SPM	1/53	
2032#	10/97	9/22	Oswestry	6/51	
2033#	11/97	5/21	Newport Pill	3/51	

No.	Built	Rebuilt as PT.	Last allocation	Withdrawal	Mileage
2034#	11/97	11/28	Kidderminster	9/55	
2035#	1/98	5/36	Ebbw Junction	3/55	
2036	1/98	1/21	Birkenhead	2/39	
2037	1/98	11/22	Worcester	7/50	
2038*#	2/98	1/27	Laira	4/53	
2039#	2/98	4/18	Lydney	4/50	
2040#	3/98	6/23	Birkenhead	10/56	
2041	4/98	10/19	Pontypool	3/47	
2042	4/98	8/23	Birkenhead	4/53	
2043	5/98	12/17	Birkenhead	1/55	
2044#	6/98	3/26	Ebbw Junction	7/51	
2045#	6/98	1/16	Lydney	12/49	
2046#	6/98	11/19	Llanelli	6/47	
2047#	7/98	6/23	Carmarthen	12/49	
2048	8/98	2/48	Ebbw Junction	5/52	
2049	9/98	2/18	Newport Ebbw vale	11/44	
2050#	9/98	6/25	St Blazey	10/51	
2051#	10/98	6/23	Kidderminster	7/51	
2052	10/98	7/25	Birkenhead	5/50	
2053#	11/98	9/22	Bristol SPM	4/54	Sold to National Smelting Co., Avonmouth 2054
	12/98	3/22	Moat Lane	3/51	
2055	1/99	7/25	Danygraig	1/51	
2056#	1/99	12/23	Carmarthen	3/51	
2057	2/99	–		9/07	Sold to Partridge, Jones & Co, Abersychan,
2058#	3/99	2/26	Cardiff East Dock	9/45	
2059#	3/99	10/24	Llanelli	11/49	
2060#	4/99	9/16	Swindon	12/54	
2061#	4/99	12/19	Wellington	4/55	
2062#	5/99	2/18	St Blazey	8/30	Rebuilt as prototype 5400
2063	6/99	10/33	Ebbw Junction	5/51	
2064#	6/99	8/23	Bristol SPM	11/49	
2065#	6/99	11/22	Tyseley	11/49	
2066*+#	7/99	1/23	Birkenhead	9/51	
2067#	8/99	9/19	Birkenhead	11/52	
2068#	8/99	9/20	Oswestry	1/53	
2069#	9/99	9/20	Birkenhead	4/59	
2070#	10/99	5/26	Bristol SPM	8/55	
2071	10/99	10/27	Croes Newydd	6/50	
2072#	11/99	11/20	Birkenhead	7/56	
2073#	11/99	6/32	Ebbw Junction	6/51	
2074*#	12/99	3/13	converted to ‘2181’ class	3/39	renumbered 2183, Croes Newydd 5/55
2075$#	1/00	8/34	Oswestry	3/51	
2076$#	2/00	7/21	Oxford	10/51	
2077*	2/00	10/27	Pontypool	2/47	
2078	3/00	2/26	Slough	12/44	
2079#	6/00	5/15	Duffryn Yard	11/52	
2080*+#	9/00	6/26	Lydney	3/52	
2081#	10/00	1/26	Llanelli	10/54	

No.	Built	Rebuilt as PT.	Last allocation	Withdrawal	Mileage
2082*+#	10/00	1/26	Birkenhead	6/55	
2083$#	11/00	8/25	Llanelli	11/51	
2084#	11/00	4/18	Lydney	2/46	
2085#	12/00	9/23	Birkenhead	8/53	
2086#	1/01	1/19	Newport Pill	5/52	
2087#	1/01	11/12	converted to '2181' class	10/39	renumbered 2188, Croes Newydd 2/52
2088#	3/01	1/18	Taunton	8/55	
2089	3/01	7/24	Birkenhead	9/51	
2090	3/01	10/20	Ebbw Junction	3/55	
2091	4/01	12/22	Lydney	4/50	
2092#	4/01	10/30	Birkenhead	8/55	
2093	5/01	11/20	Worcester	1/52	
2094#	5/01	11/29	Pontypool	5/52	
2095*+#	6/01	4/18	Stafford Road	4/51	
2096	7/01	5/17	Lydney	5/50	reverted to saddle tank, 10/28 – 1/34
2097#	7/01	11/22	Laira	3/55	
2098#	8/01	8/25	Llanelli	5/51	
2099$#	9/01	8/28	Birkenhead	6/54	
2100$	11/01	4/27	Worcester	6/52	
2101*$#	1/02	2/18	Birkenhead	3/56	
2102*+	1/02	2/13	Hereford	11/49	
2103$	2/02	11/17	Laira	3/46	
2104	3/02	7/27	Birkenhead	5/51	
2105	4/02	6/29	converted to '2181' class	12/39	renumbered 2189, Stourbridge 10/50
2106*#	4/02	10/29	Birkenhead	8/52	
2107#	5/02	3/36	Birkenhead	6/56	
2108#	5/02	12/34	Birkenhead	12/54	
2109#	6/02	5/31	Worcester	2/52	
2110	7/02	11/18	Stafford Road	7/50	
2111#	7/02	10/27	Carmarthen	3/53	
2112#	8/02	9/16	Birkenhead	9/54	
2113	9/02	11/16	Newport Pill	3/50	
2114#	9/02	5/22	Lydney	12/49	
2115*#	10/02	3/13	Worcester	6/52	
2116#	10/02	12/17	Taunton	2/46	
2117*+#	11/02	11/23	Aberdare	6/51	
2118	11/02	2/30	converted to '2181' class	7/39	renumbered 2186, Croes Newydd 4/55
2119	12/02	2/13	Swindon	8/46	
2120$	1/03	3/20	Stourbridge	8/46	square saddle tank, 8/06
2121	2/03	10/22	Gloucester	6/52	
2122#	3/03	5/24	Ebbw Junction	11/52	
2123*#	3/03	6/25	Cardiff East Dock	10/52	
2124*+	5/03	10/24	Cardiff East Dock	7/50	
2125#	5/03	12/12	converted to '2181' class	7/39	renumbered 2182, St Blazey 8/55
2126	5/03	3/27	Burry Port	9/50	
2127#	5/03	4/22	Taunton	9/52	
2128	6/03	–	sold to Baldwin's Ltd, Blaendare Col. Pontypool	1/11	scrapped 4/43

No.	Built	Rebuilt as PT.	Last allocation	Withdrawal	Mileage
2129	7/03	5/35	Birkenhead	3/53	
2130*+	7/03	12/12	Cardiff East Dock	5/50	
2131#	8/03	8/24	Lydney	11/51	
2132*+#	9/03	11/22	Lydney	8/50	
2133*+	9/03	2/23	converted to '2181' class	2/39	renumbered 2181, St Blazey 2/52
2134#	10/03	9/26	Birkenhead	5/57	
2135#	10/03	8/35	Bristol SPM	1/53	
2136	11/03	2/29	Birkenhead	4/55	
2137#	11/03	10/22	Llanelli	12/49	
2138#	12/03	4/22	Hereford	5/56	
2139	1/04	4/23	Danygraig	2/45	
2140+#	1/04	2/16	Cardiff East Dock	5/52	square saddle tank, 6/08
2141#	3/04	6/35	Cardiff East Dock	10/50	
2142*+#	3/04	9/26	Cathays	2/47	
2143#	4/04	11/24	converted to '2181' class	8/39	renumbered 2187, Stourbridge 2/52
2144$#	5/04	3/30	Worcester	5/55	
2145	5/04	2/29	converted to '2181' class	6/39	renumbered 2184, Croes Newydd 10/50
2146#	6/04	6/24	Danygraig	3/53	
2147	6/04	10/21	Cardiff East Dock	3/53	
2148#	7/04	11/23	Laira	2/52	
2149#	8/04	1/23	converted to '2181' class	7/39	renumbered 2185, Croes Newydd 12/52
2150#	9/04	7/22	Llanelli	1/52	
2151$#	9/04	7/20	Danygraig	5/52	
2152*	10/04	5/23	Birkenhead	11/51	
2153	10/04	10/26	Lydney	12/50	
2154	11/04	8/28	Newport Pill	2/52	
2155	11/04	11/29	Lydney	11/50	
2156#	12/04	9/21	Birkenhead	2/53	
2157	1/05	8/21	converted to '2181' class	1/40	renumbered 2190, Croes Newydd 4/51
2158*+	2/05	5/16	Lydney	11/45	reverted to saddle tank, 9/22 – 9/24
2159*+#	2/05	9/16	Newport Pill	3/51	
2160*#	3/05	8/24	Birkenhead	3/57	

0-6-4 Crane Tanks

Dimensions & Weight Diagram

As built in 1901 (Nos. 17 & 18)

Cylinders	16in x 24in
Wheel diameter	4ft 1½in
Trailing bogie	2' 8in
Boiler pressure	150 lbs psi
Heating surface	1,086.9sqft
Grate area	12.61sqft
Tank capacity	1,200 gallons
Crane capacity	6 tons at 18ft; 9 tons at 12ft
Weight	63 tons 12 cwt
Axleload	14 tons (engine)
	24 tons (crane bogie)

As built in 1921 (No.16)
As above except:

Boiler pressure	165 lbs psi
Heating surface	980.75sqft
Grate area	11.16sqft

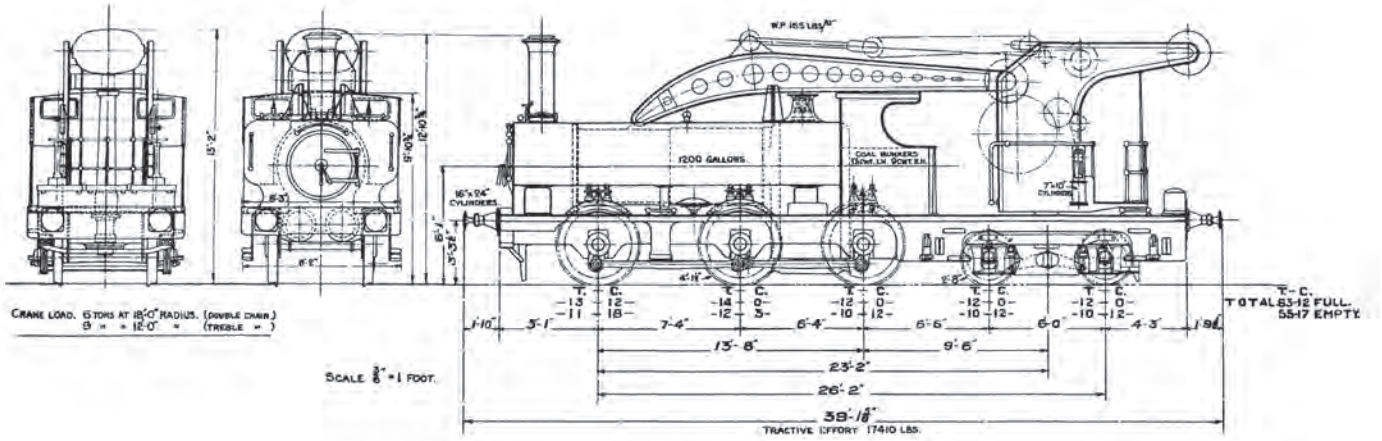

Statistics

No.	Built	Name	Allocation	Withdrawal	
16	4/21	*Hercules*	Swindon Works	9/36	
17	4/01	*Cyclops*	Wolverhampton Works	9/36	Swindon Works from 3/34
18	4/01	*Steropes*	Swindon Works	9/36	

1490 4-4-0PT

Dimensions & Weight Diagram

Cylinders	15½ in x 26in
Wheel diameter	4ft 7½in
Bogie wheels	2ft 8in
Boiler pressure	165 lbs psi
Heating surface	1,484.34sqft
Grate area	20.41sqft
Tank capacity	1,075 gallons
Weight	50 tons 16 cwt
Axleload	17 tons 12 cwt
Tractive effort	15,785 lbs

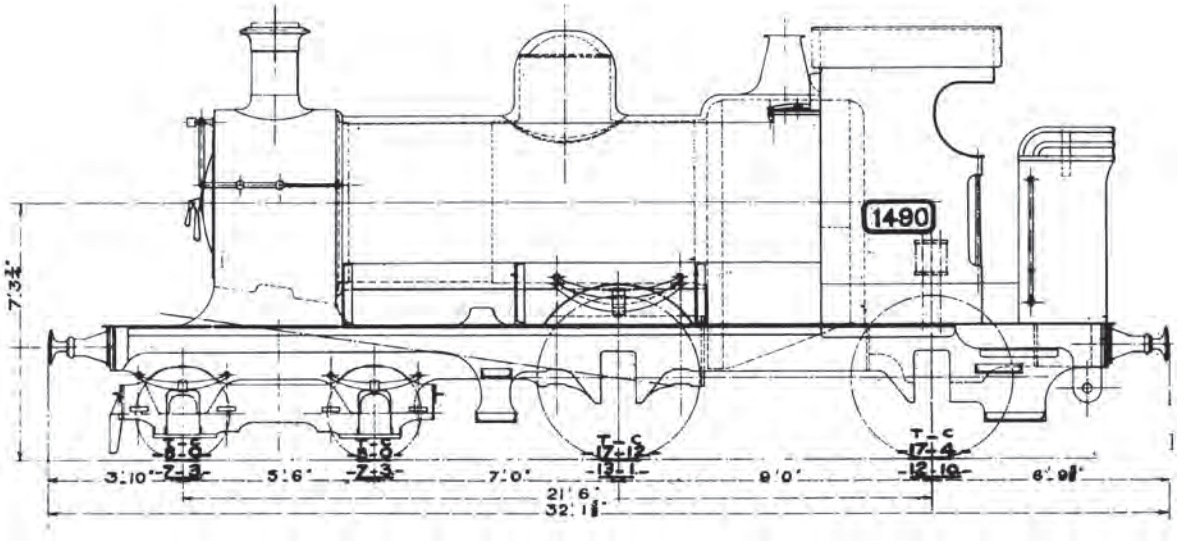

Statistics

No.	Built	First Allocation	Last Allocation	Withdrawal	Remarks
1490	10/98	Bristol District	Swindon	11/07	sold to Ebbw Vale Steel Co (scrapped 1929)

Barry 'F' Saddle/Pannier Tank Dimensions & Weight Diagram

Saddle tanks as built in 1890

Cylinders	18in x 26in
Wheel diameter	4ft 3in
Boiler pressure	150 lbs psi
Heating surface	1,070sqft
Grate area	20.5sqft
Tank capacity	1,050 gallons
Bunker capacity	1½ tons coal
Weight	49½ tons
Axleload	17 tons

As modified by GWR

As above except:

Cylinders	17½in x 26in
Boiler pressure	160 lbs psi
Weight	49 tons 6 cwt
Axleload	17 tons 9 cwt
Tractive effort	21,230 lbs

As rebuilt with pannier tanks

As above except:

Tank capacity	1,200 gallons
Weight	46 tons 18 cwt
Axleload	15 tons 18 cwt

Weight diagram – saddle tank

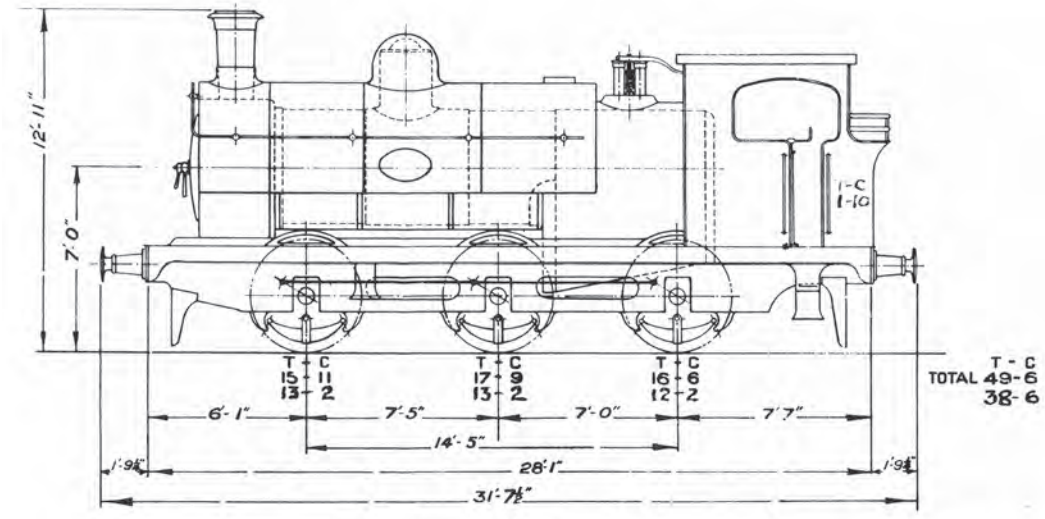

Weight diagram – pannier tank

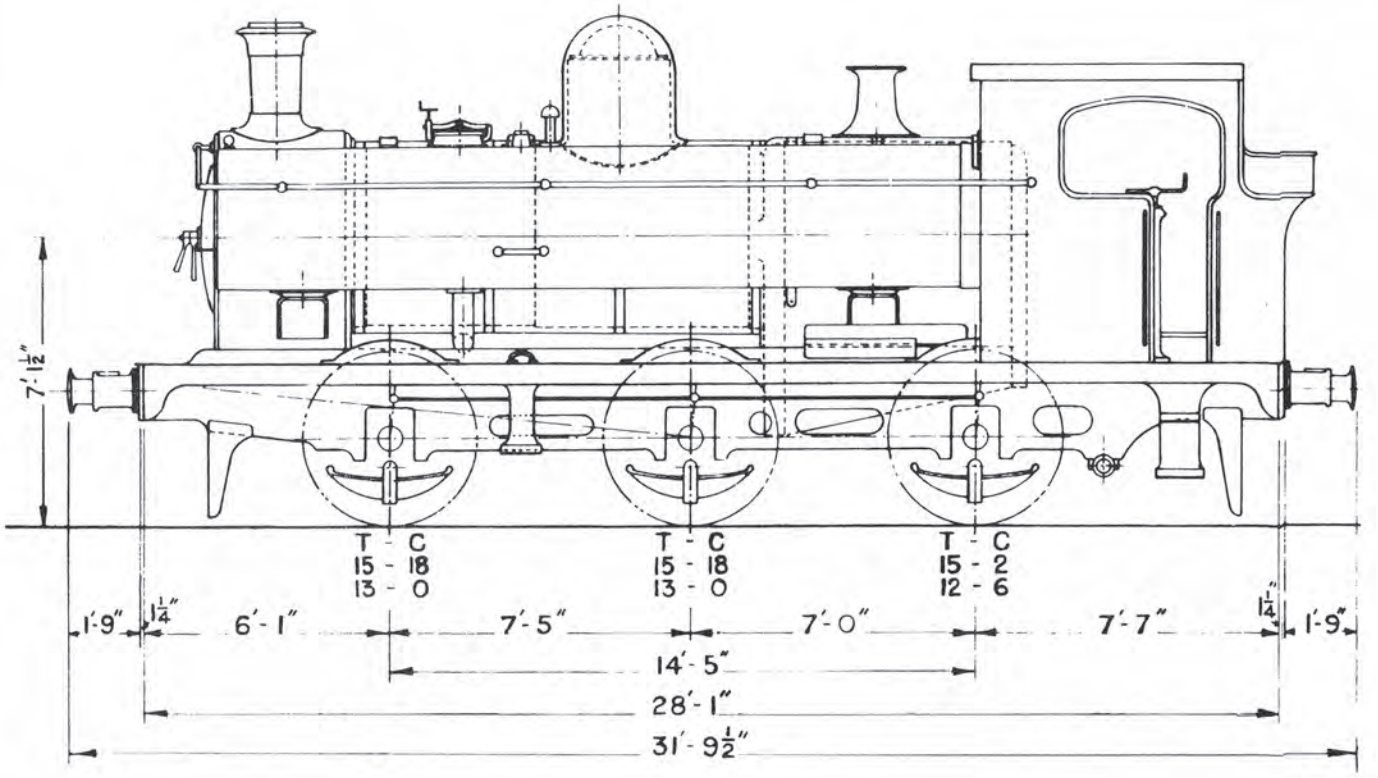

Statistics

GW No.	Built	Barry No.	Rebuilt as PT	Allocation after sale	Withdrawal	
708	3/00	37	–	Bargoed Colliery, 3/33	10/47	
710	7/90	47	4/24		5/32	
711	8/90	48	–	Bargoed Colliery, 8/34	7/60	
712	8/90	49	–	New Mains Coll 3/33	-/59	
713	3/00	52	–	Northwood, 7/36	9/46	
714	6/92	64	4/24	Gateshead, 9/34	-/56	
715	7/92	65	–	Treharris, 8/32	9/50	
716	12/94	70	–		5/32	
717	12/94	71	–	Northwood, 11/34	12/63	NCB Springwell
718	1/95	72	3/24	Ashington, 1/35	6/62	
719	3/00	99	–	Rising Sun Coll, 9/34	9/62	NCB Backworth
720	3/00	100	–	Talywain Iron, 11/36	2/61	
721	3/00	101	5/24	Treorchy Colliery, 5/35	8/53	
722	3/00	102	–	Cambois Colliery, 3/36	8/58	

GW No.	Built	Barry No.	Rebuilt as PT	Allocation after sale	Withdrawal	
723	3/00	103	3/27	Ashington, 1/35	10/60	
724	3/00	104	–	Hartley Colliery, 5/33	4/60	
725	2/05	127	7/24	Northwood, 11/34	2/50	
726	2/05	128	–	Gwaun-cae-Gurwen, 8/32	-/57	
729	3/05	130	–	Hartley Colliery, 8/32	12/63	NCB Hazelrigg Colliery
742	4/05	131	–	Treorchy Colliery, 5/32	11/62	
747	4/05	132	–	Hartley Colliery, 5/33	12/63	
754	2/05	133	–	Bargoed Colliery, 1/37	7/60	Side tank at end
776	3/05	134	–	Aberaman Colliery, 8/32	4/60	
777	3/05	135	–		11/26	
778	4/05	136	–		4/32	
779	5/05	137	–		8/23	GW No. not carried
780	5/05	138	7/27	Hafodyrynys, 5/36	6/64	
807	3/05	129	3/24		7/32	

Dimensions & Weight Diagram – Cardiff Railway GW 691-693 class

Kitson 1882 (No. 2, GW 693)

Cylinders	17in x 26in
Wheel diameter	4ft 2½in
Boiler pressure	140 lbs psi
Heating surface	883sqft
Grate area	14.3sqft
Tank capacity	900 gallons
Weight	40 tons
Axleload	16 tons

Kitson 1889 (Nos 30 & 29, GW 691 & 692)

Cylinders	17½in x 26in
Wheel diameter	4ft 6in
Boiler pressure	160 lbs psi (reduced later to 150 lbs psi)
Heating surface	947.13sqft
Grate area	18.7sqft
Tank capacity	1,350 gallons
No bunker	23 cwt coal
Weight	44 tons 7 cwt
Axleload	15 tons 11 cwt
Tractive effort	20,055 lbs

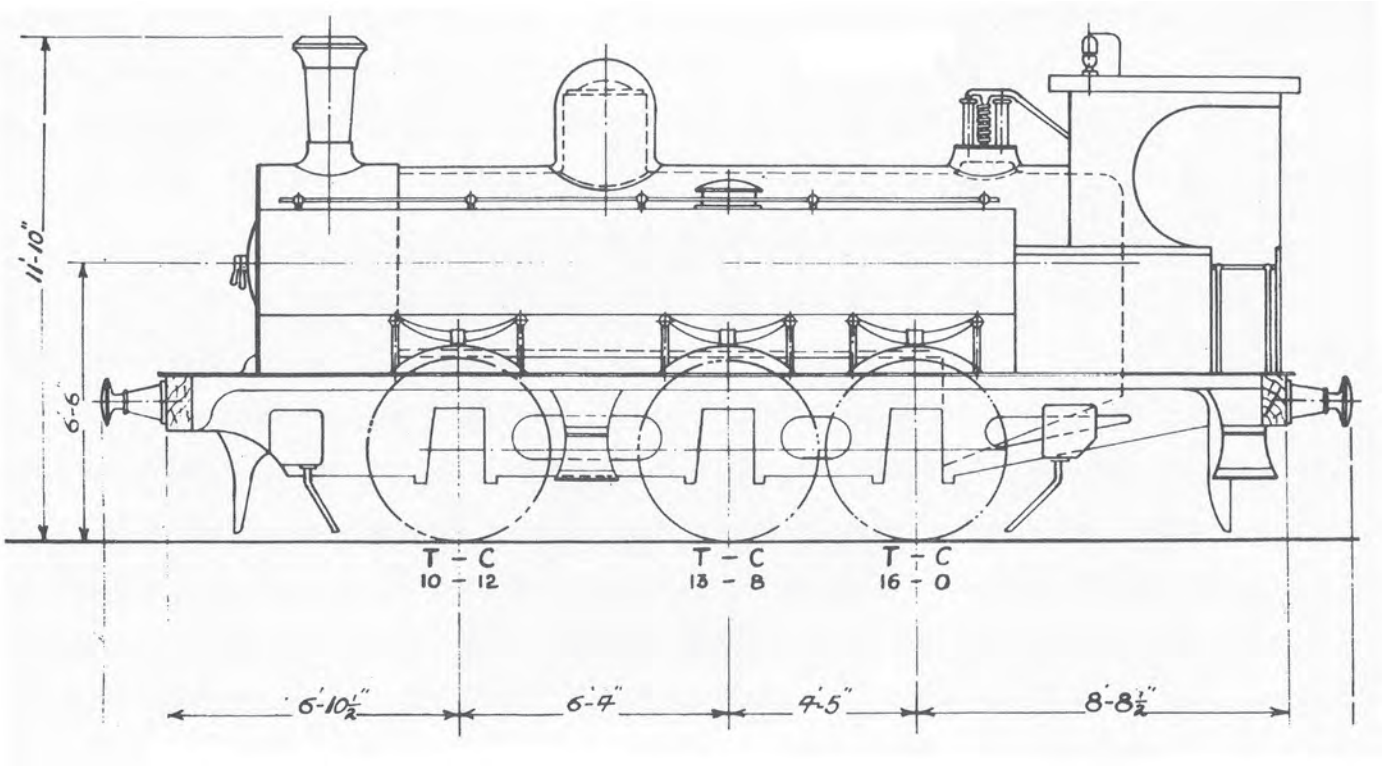

Statistics

No.	Built	GW No.	Allocation	Withdrawal	
2	1882	693	Cardiff Docks	2/25	
29	1889	692	Cardiff Docks	2/29	Sold to Wynne Jones/Ebbw Vale Steel & Coal Co as 38 *Irthlingborough* to RTB Scunthorpe, scrapped 1/57
30	1889	691	Cardiff Docks	2/29	Sold to Wynne Jones/Ebbw Vale Steel & Coal Co as 40 *Cwmcarn* scrapped 1946

Dimensions & Weight Diagram – Cardiff Railways GW 681 class
As built in 1920

Cylinders	18in x 24in
Wheel diameter	4ft 1½in
Boiler pressure	175 lbs psi
Heating surface	1,079.7sqft
Grate area	17.36sqft
Tank capacity	1,250 gallons
Bunker capacity	2 tons
Weight	49 tons
Axleload	17 tons 4 cwt
Tractive effort	23,365 lbs

As rebuilt with pannier tanks
As above except:

Boiler pressure	165 lbs psi
Heating surface	1,090sqft
Grate area	16.76sqft
Tank capacity	1,170 gallons
Weight	45 tons 6 cwt
Axleload	15 tons 11 cwt
Tractive effort	22,030 lbs

Weight diagram – saddle tank

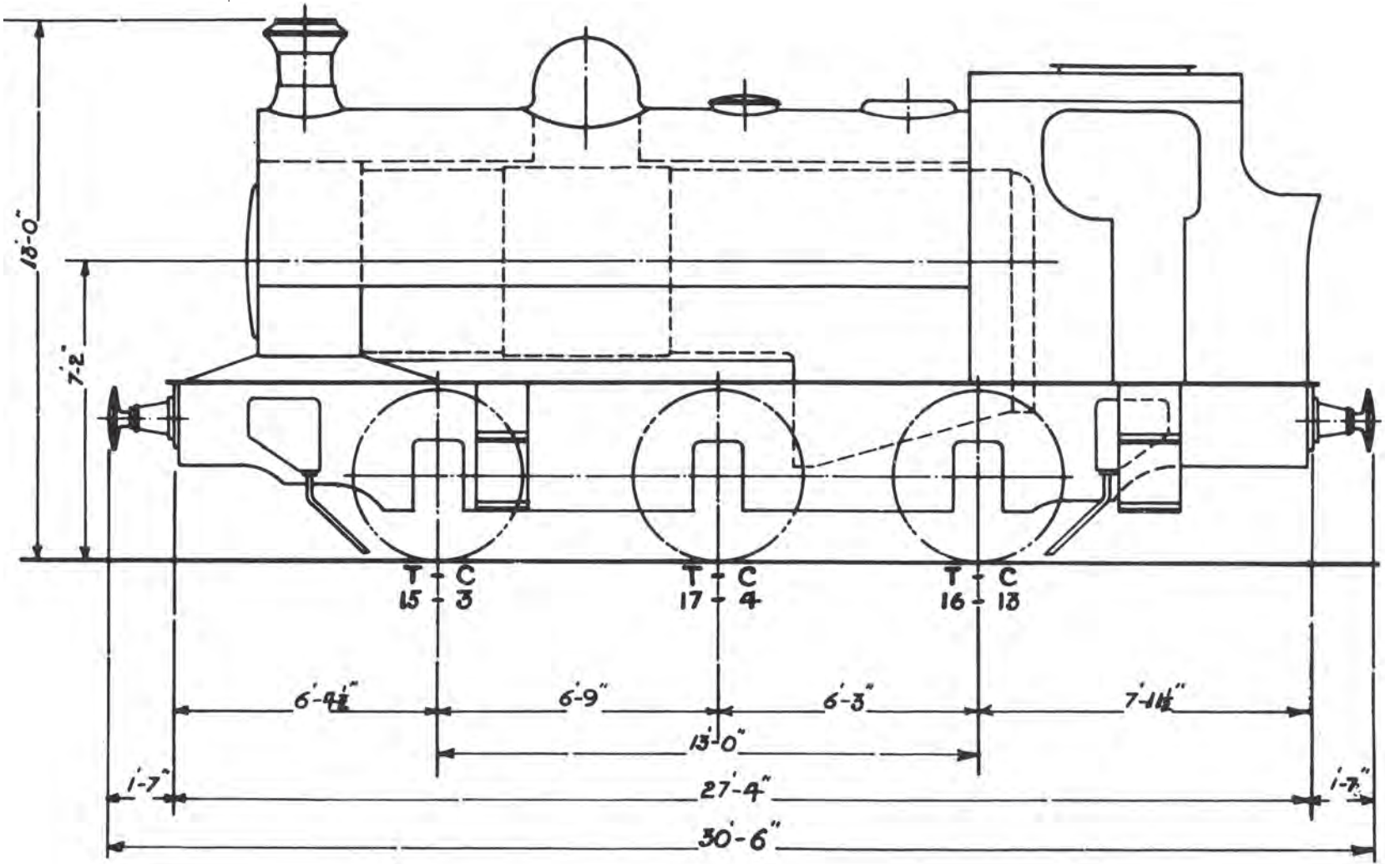

Weight diagram – pannier tank

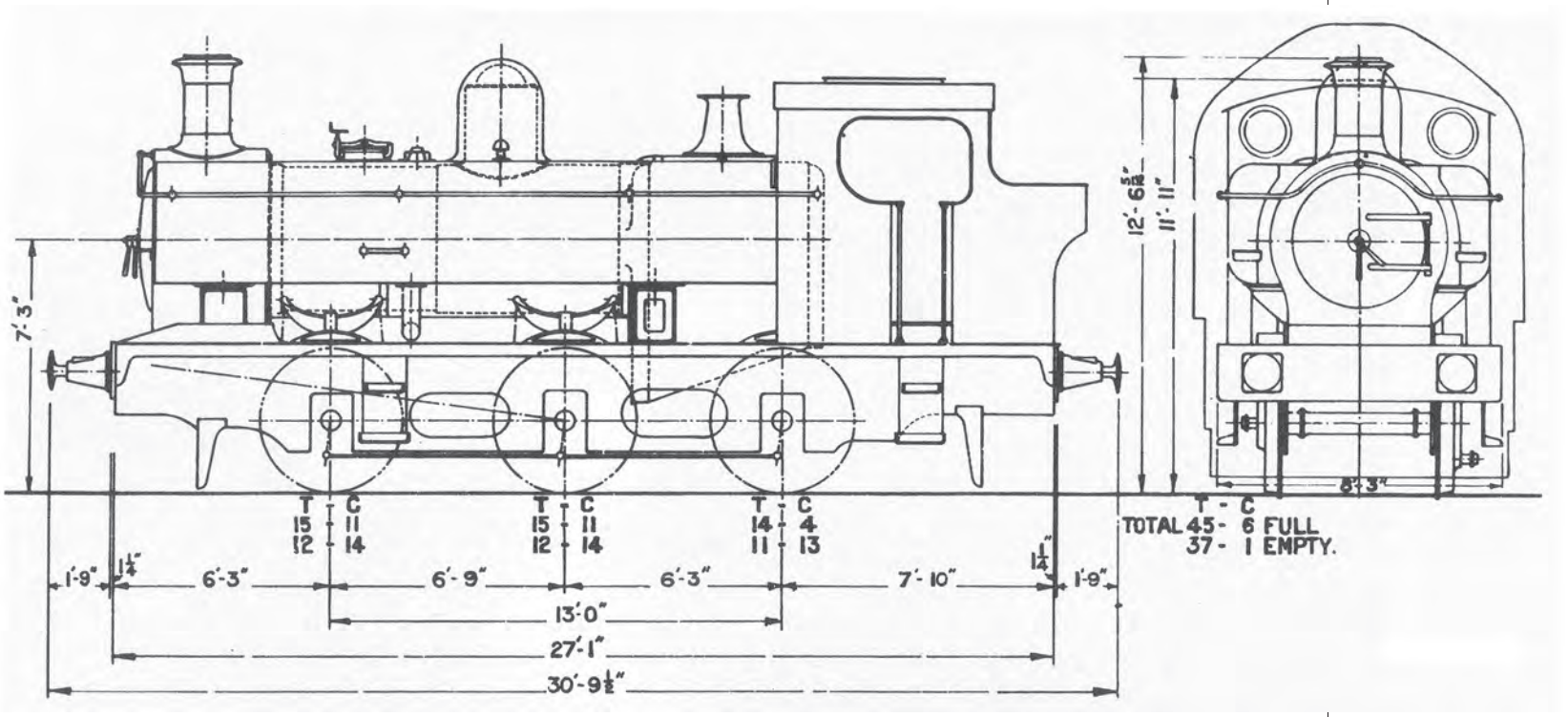

Statistics

No.	Built	Rebuilt as PT	GW No.	First allocation	Last allocation	Withdrawal
14	1920	2/30	681	Cardiff Docks	Cardiff East Dock	2/55
16	1920	10/39	682	Cardiff Docks	Cardiff East Dock	10/53
17	1920	10/26	683	Cardiff Docks	Cardiff East Dock	12/54
32	1920	12/36	684	Cardiff Docks	Cardiff East Dock	5/54

Dimensions & Weight Diagram Rhymney Railway Class 57 0-6-2T (GW 87-148)

As built in 1890

Cylinders	17½ in x 24in
Wheel diameter	4ft 7in
Radial wheels	3ft 8in
Boiler pressure	140 lbs psi
Heating Surface	1,171.1sqft
Tank capacity	1,200 gallons
Bunker capacity	2¾ tons coal
Weight	Not recorded

As rebuilt from 1906
As above except:

Boiler pressure	150 lbs psi
Heating surface	944.5sqft
Grate area	16.4sqft
Tank capacity	1,230 gallons
Weight	54 tons 6 cwt
Axleload	16 tons 11 cwt
Tractive effort	17,040 lbs

As rebuilt with pannier tanks (six examples only)

Tank capacity	1,000 gallons

Weight diagram – saddle tank

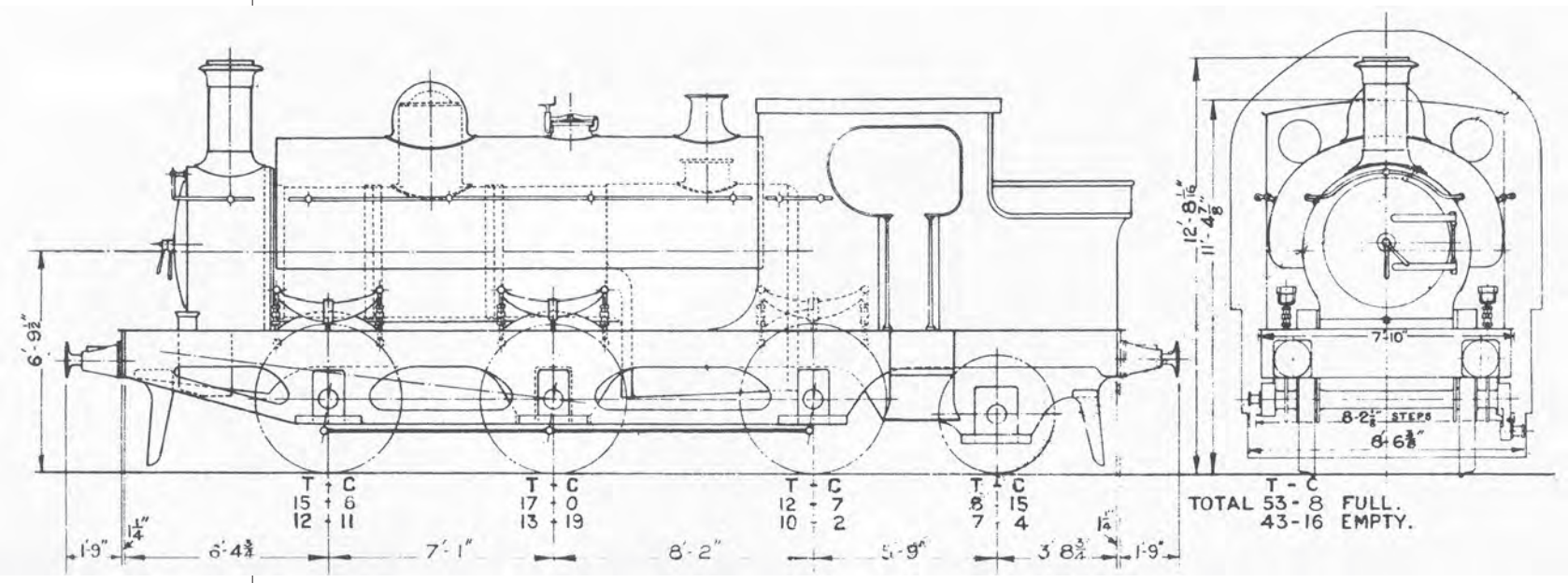

Statistics of six locos rebuilt as pannier tanks

No.	Built	Rebuilt as PT	GW No.	First allocation	Last allocation	Withdrawal
67	1891	12/29	97	Rhymney	Dowlais	8/32
85	1897	8/29	122	Rhymney	Cae Harris	10/32
93	1900	6/29	136	Senghenydd	Cathays	7/34
95	1900	7/26	138	Senghenydd	Cae Harris	8/34
96	1900	2/31	139	Cardiff Docks	Cae Harris	10/34
99	1900	2/29	141	Senghenydd	Abercynon	8/34

The other 41 0-6-2STs of this class were withdrawn between 1925 and 1932, apart from RR No.97 which was destroyed in a boiler explosion in 1909. The last surviving saddle tank was RR 103 (GW 145) withdrawn from Cae Harris in 3/32.

Dimensions & Weight Diagram – Brecon & Merthyr GW 2190/1

As built in 1881

Cylinders	17in x 24in
Wheel diameter	4ft 7in
Boiler pressure	140 lbs psi
Heating surface	1,086.3sqft
Grate area	13.4sqft
Tank capacity	770 gallons
Weight	38 tons
Axleload	12 tons 16 cwt
Tractive effort	14,870 lbs

As converted to pannier tank

As above except:

Heating surface	1,106.65sqft
Grate area	13sqft
Tank capacity	1,000 gallons
Weight	41 tons 7 cwt
Axleload	13 tons 19 cwt

Weight diagram – saddle tank

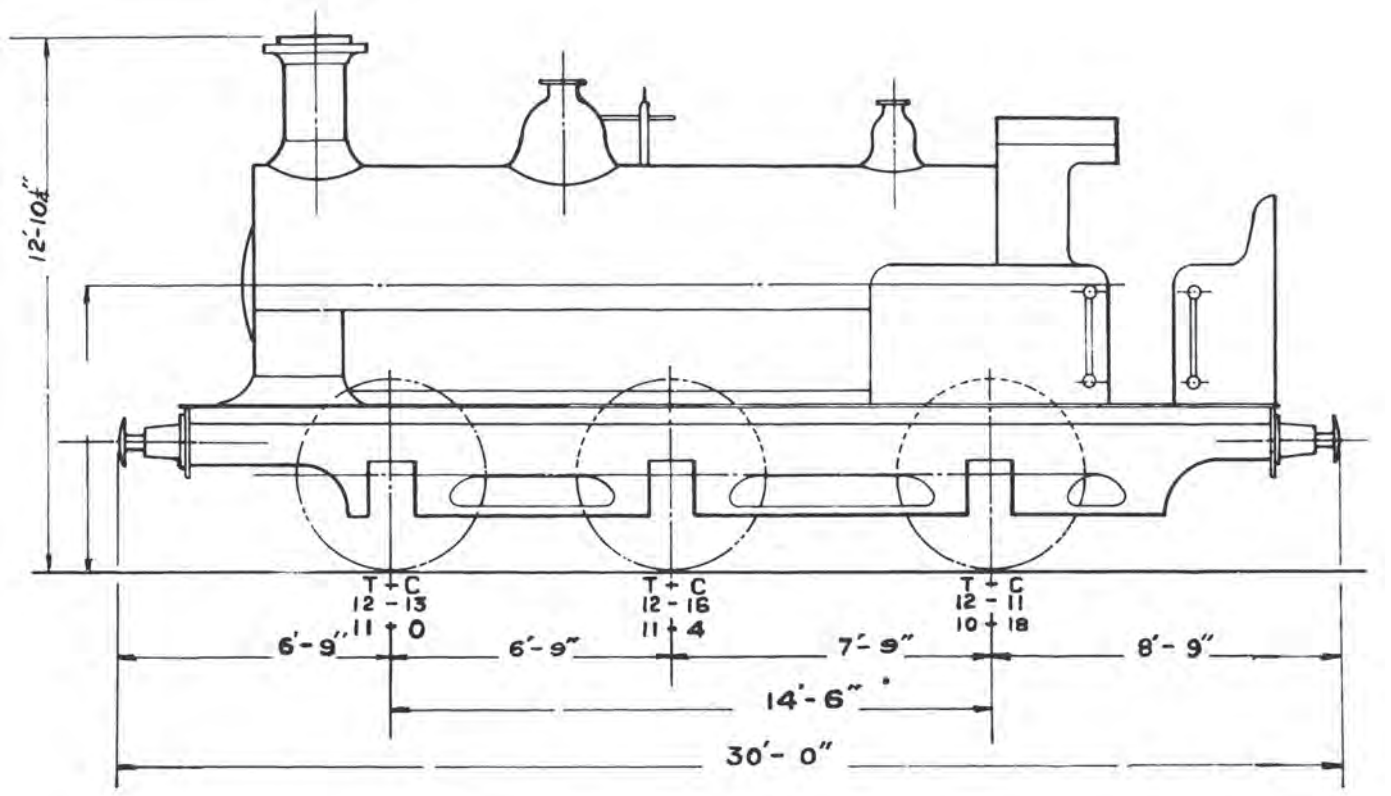

Weight diagram – pannier tank

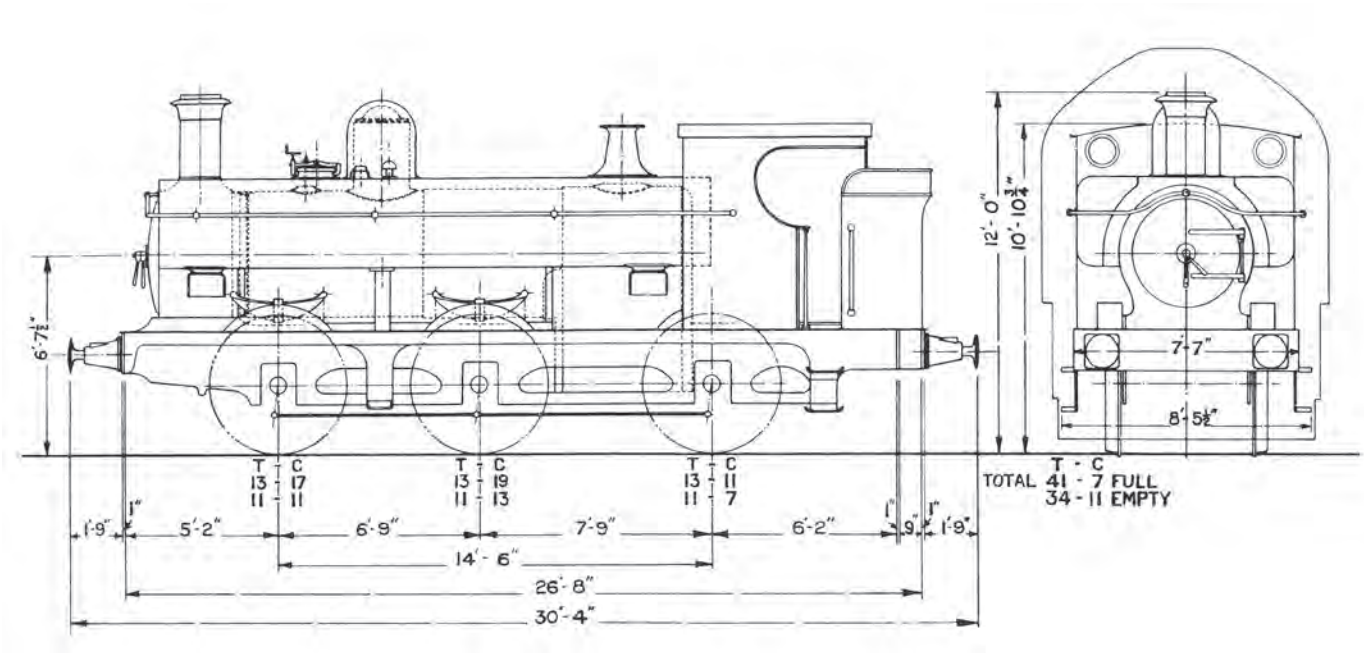

Statistics

No.	Built	Rebuilt as PT	GW No.	First allocation	Last allocation	Withdrawal	
17**	1881	4/26	2190	Bassaleg	Didcot	5/34	** fitted with spark arrester 4/30
11*	1881	4/26	2191	Bassaleg	Ebbw Junction	4/32	*renumbered 18 in 1889

Dimensions & Weight Diagram – Brecon & Merthyr GW 2177 - 2188

As built 1884-6

Cylinders	17in x 24in
Wheel diameter	4ft 2in
Boiler pressure	140 lbs psi
Heating surface	1,089sqft
Grate area	15sqft
Tank capacity	900 gallons (2186 had pannier tanks with 1,000 gallons)
Weight	45 tons
Axleload	15 tons
Tractive effort	16,510 lbs

As rebuilt with pannier tanks (2184 only)

As above except:

Boiler pressure	165 lbs (2184 only)
Tank capacity	1,000 gallons
Weight	43 tons 16 cwt
Axleload	15 tons 9 cwt

Weight diagram – saddle tank

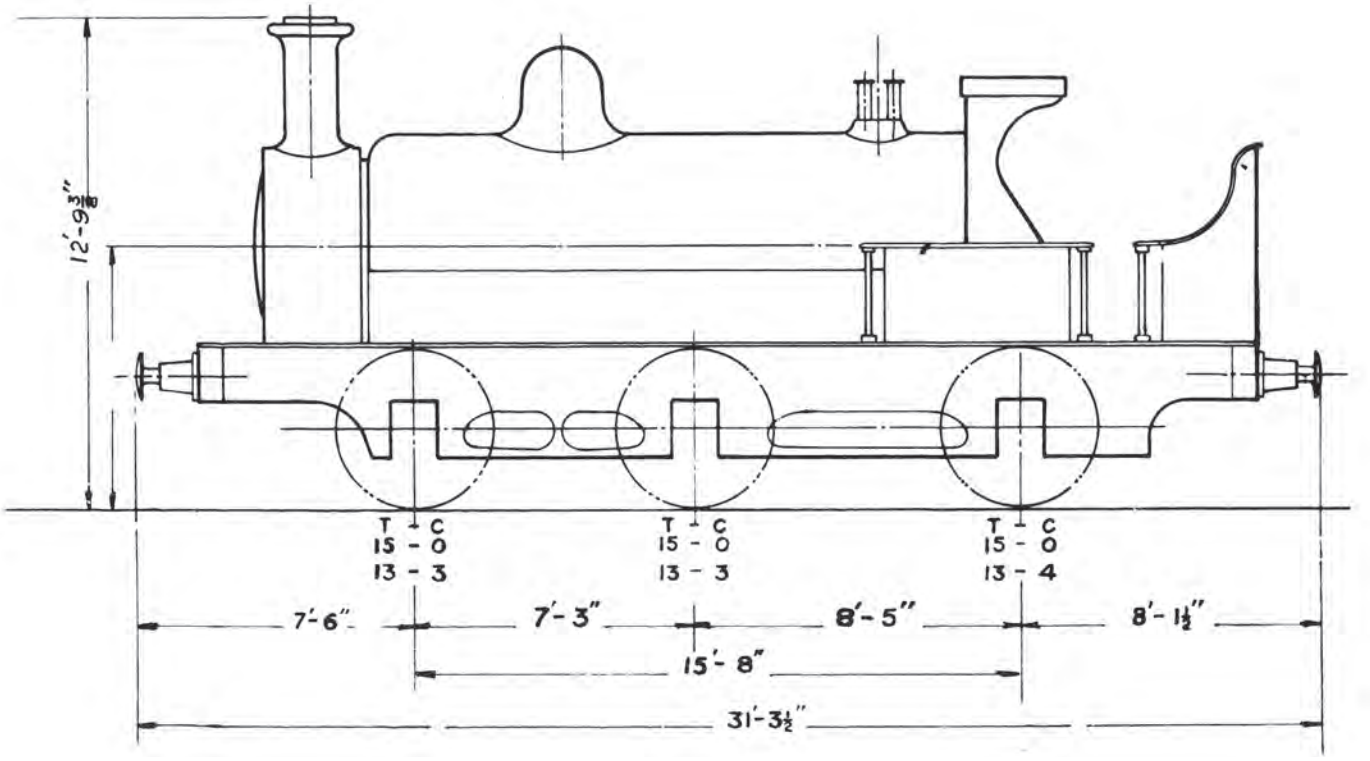

Weight diagram – pannier tank

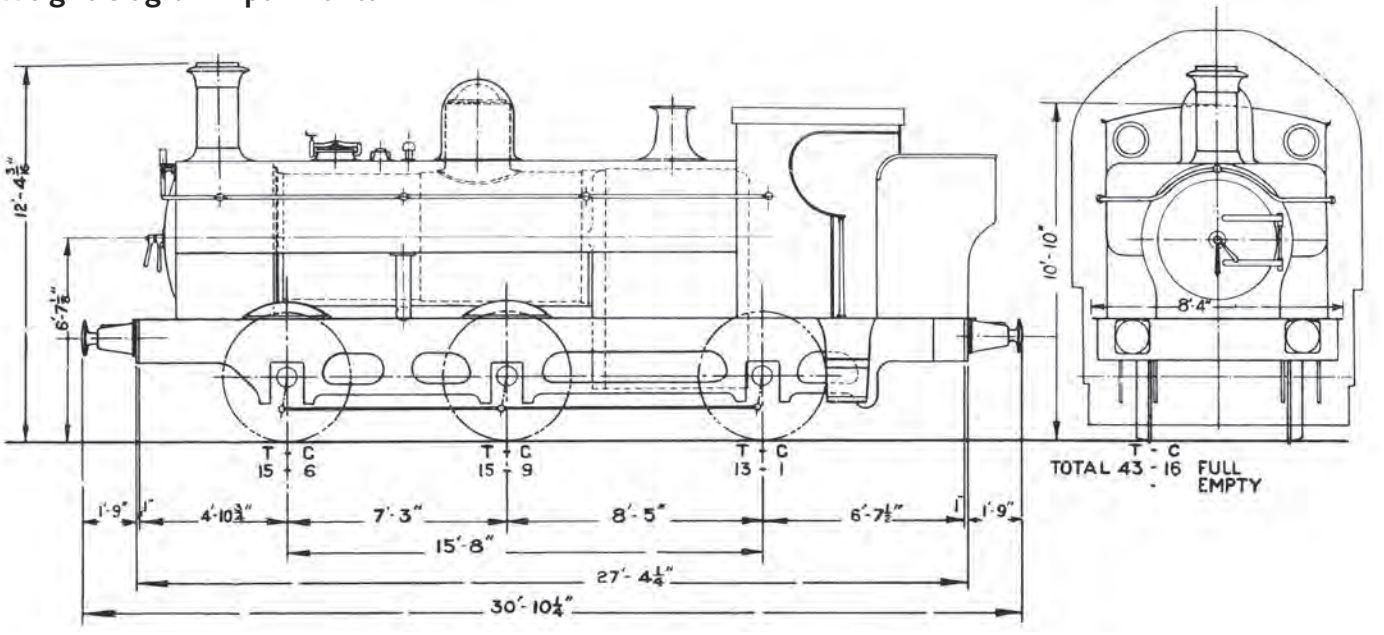

Statistics

No.	Built	Rebuilt as PT	GW No.	First allocation	Last allocation	Withdrawal
1	1885		2177	Brecon	Brecon	2/28
2	1885		2178	Brecon	Brecon	12/25
3	1886		2179	Brecon	Ebbw Junction	10/26
4	1886		2180	Bassaleg	Ebbw Junction	10/26
5	1884		2181	Bassaleg	Bassaleg	7/27
6	1884		2182	Brecon	Ebbw Junction	12/27
7	1884		2183	Brecon	Ebbw Junction	2/32
8	1884	2/24	2184	Brecon	Ebbw Junction	7/33
13	1886		2185	Machen	Brecon	7/23
14	1886	9/23	2186	Bassaleg	Ebbw Junction	12/34 Sold, scrapped 1944
15	1884		2187	Bassaleg	Brecon	11/23
16	1884		2188	Bassaleg	Ebbw Junction	3/28

Dimensions & Weight Diagram – Brecon & Merthyr GW 2169 – 2173

As built in 1896-1900

Cylinders	17in x 24in
Wheel diameter	4ft 7½in
Boiler pressure	160 lbs psi
Heating surface	1,111sqft
Grate area	15¼sqft
Tank capacity	1,100 gallons
Weight	49 tons 3 cwt
Axleload	16½ tons
Tractive effort	16,990 lbs

As rebuilt with pannier tanks

As above except:

Tank capacity	1,200 gallons
Weight	48 tons 5 cwt
Axleload	17 tons 14 cwt

Weight diagram – saddle tank

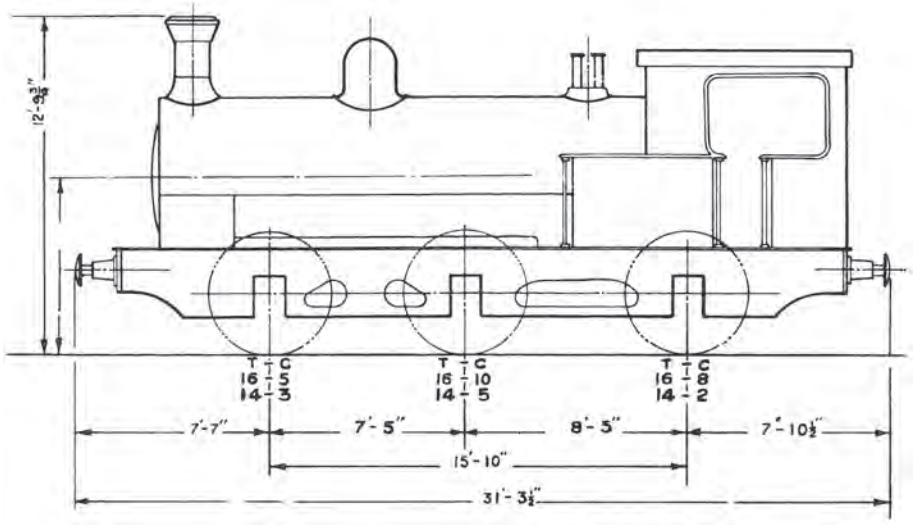

Weight diagram – pannier tank

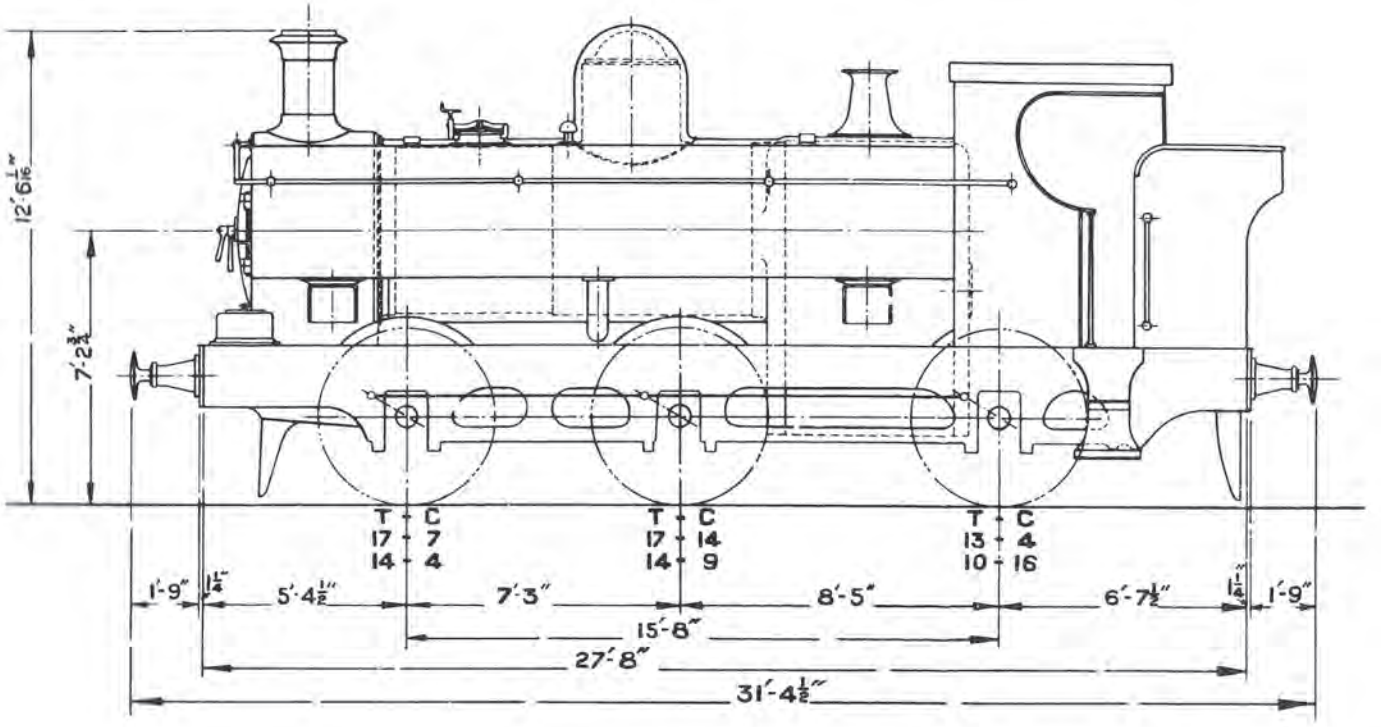

Statistics

No.	Built	Rebuilt as	PT GW No.	First allocation	Last allocation	Withdrawal
22	10/96	1/24	2169	Basaaleg	Bassaleg	10/27
24	10/96		2170	Bassaleg	Cardiff Docks	9/28
27	9/00	10/26	2171	Bassaleg	Brecon	7/32
28	9/00	10/23	2172	Brecon	Bassaleg	5/28
29	10/00	9/24	2173	Brecon	Ebbw Junction	5/32

Dimensions & Weight Diagram – Cleobury & Mortimer GW 28 – 29

As built in 1908

Cylinders	16in x 22in
Wheel diameter	3ft 6in Boiler pressure 160 lbs psi
Heating surface	918.25sqft
Grate area	14.6sqft
Tank capacity	890 gallons
Weight	38 tons 2 cwt
Axleload	13 tons 6 cwt
Tractive effort	18,240 lbs

As rebuilt with pannier tanks
As above except:

Tank capacity	850 gallons
Weight	39 tons 18 cwt
Axleload	14½ tons

Weight diagram – saddle tank

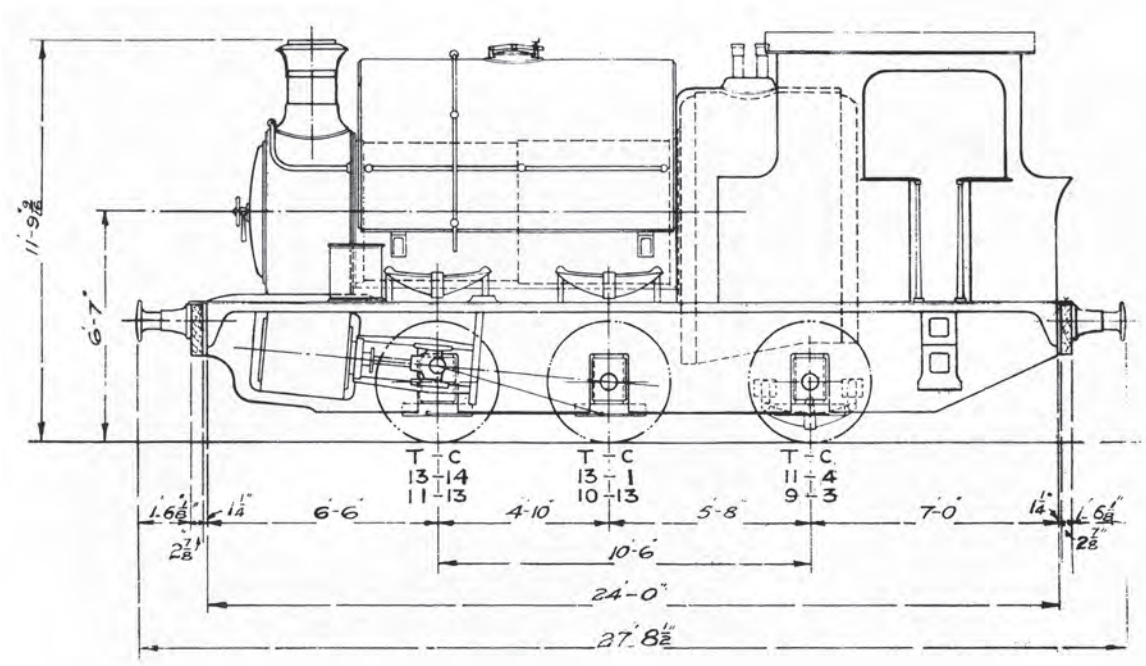

Weight diagram – pannier tank

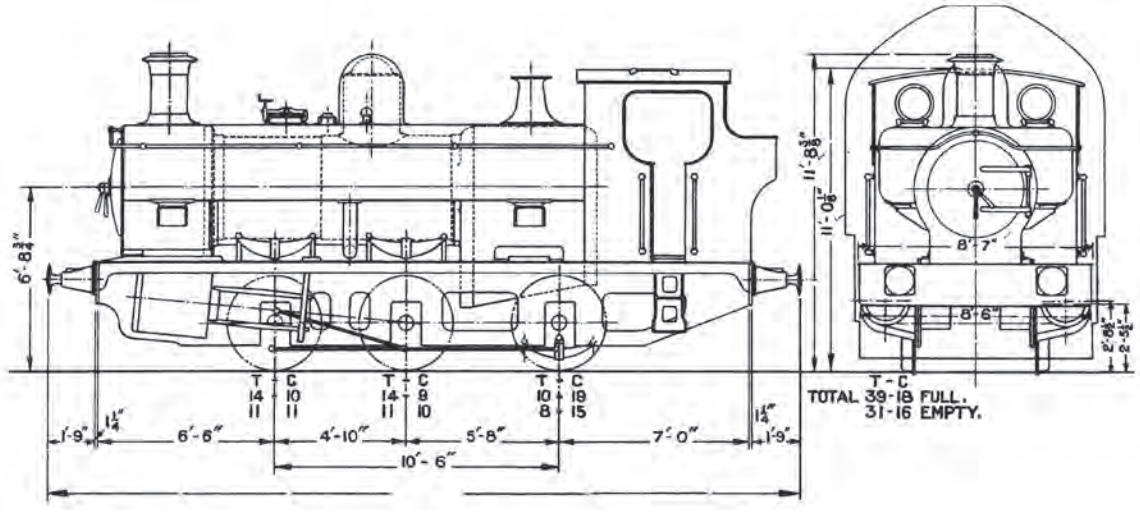

No.	Built	Rebuilt as PT	GW No.	First allocation	Last allocation	Withdrawal
Cleobury	1908	1931	28	Cleobury	Ebbw Junction	11/53
Burwarton	1908	1924	29	Cleobury	Kidderminster	2/54

Dimensions & Weight Diagram – South Wales Mineral Railway GW 817 - 818

Cylinders	17in x 24in
Wheel diameter	4ft 10in
Boiler pressure	150 lbs psi
Tank capacity	1,120 gallons (817)
	1,200 gallons (818)
Weight	47 tons (817)
	42 tons 12 cwt (818)
Axleload	14 tons 19 cwt (818)

Weight diagram – saddle tank

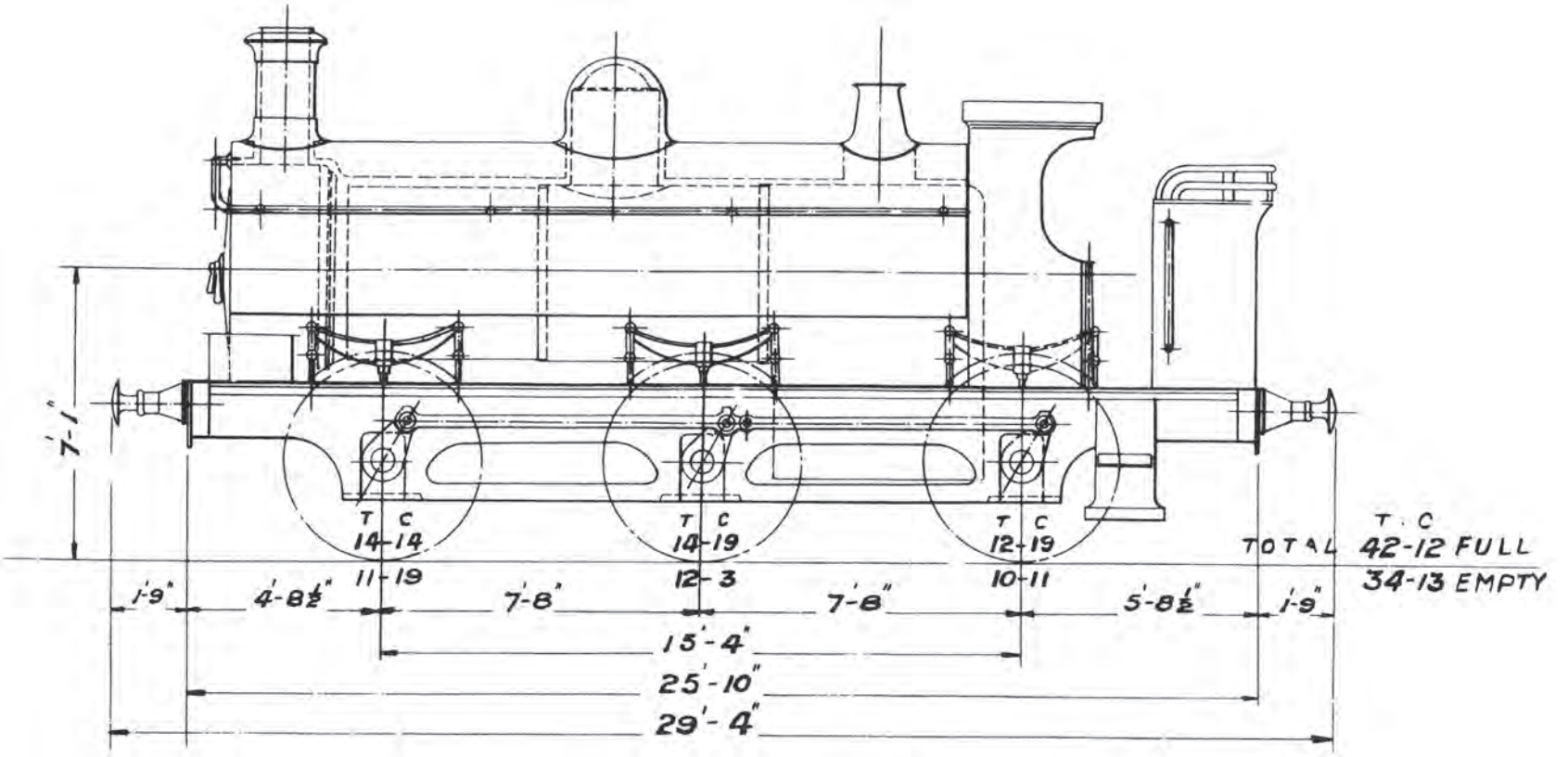

Statistics

No.	Built	Original No.	Rebuilt as PT	GW No.	First allocation	Last allocation	Withdrawal
6	1873	GW 1317		817	Duffryn Yard	Duffryn Yard	10/26
7	1873	GW 1324	4/24	818	Duffryn Yard	Swansea East Dock	5/32

Dimensions & Weight Diagram – Powlesland & Mason GW 795 0-6-0PT

Cylinders	14in x 20in	
Wheel diameter	3ft 6in	
Boiler pressure	140 lbs psi	
Heating surface	561sqft	(567sq ft – 796)
Grate area	9.45sqft	(8.7sqft – 796)
Tank capacity	660 gallons	(680 gallons – 796)
Weight	26 tons 3 cwt	(24 tons 17 cwt – 796)
Axleload	13 tons 17 cwt	(12 tons 11 cwt – 796)
Tractive effort	11,105 lbs	

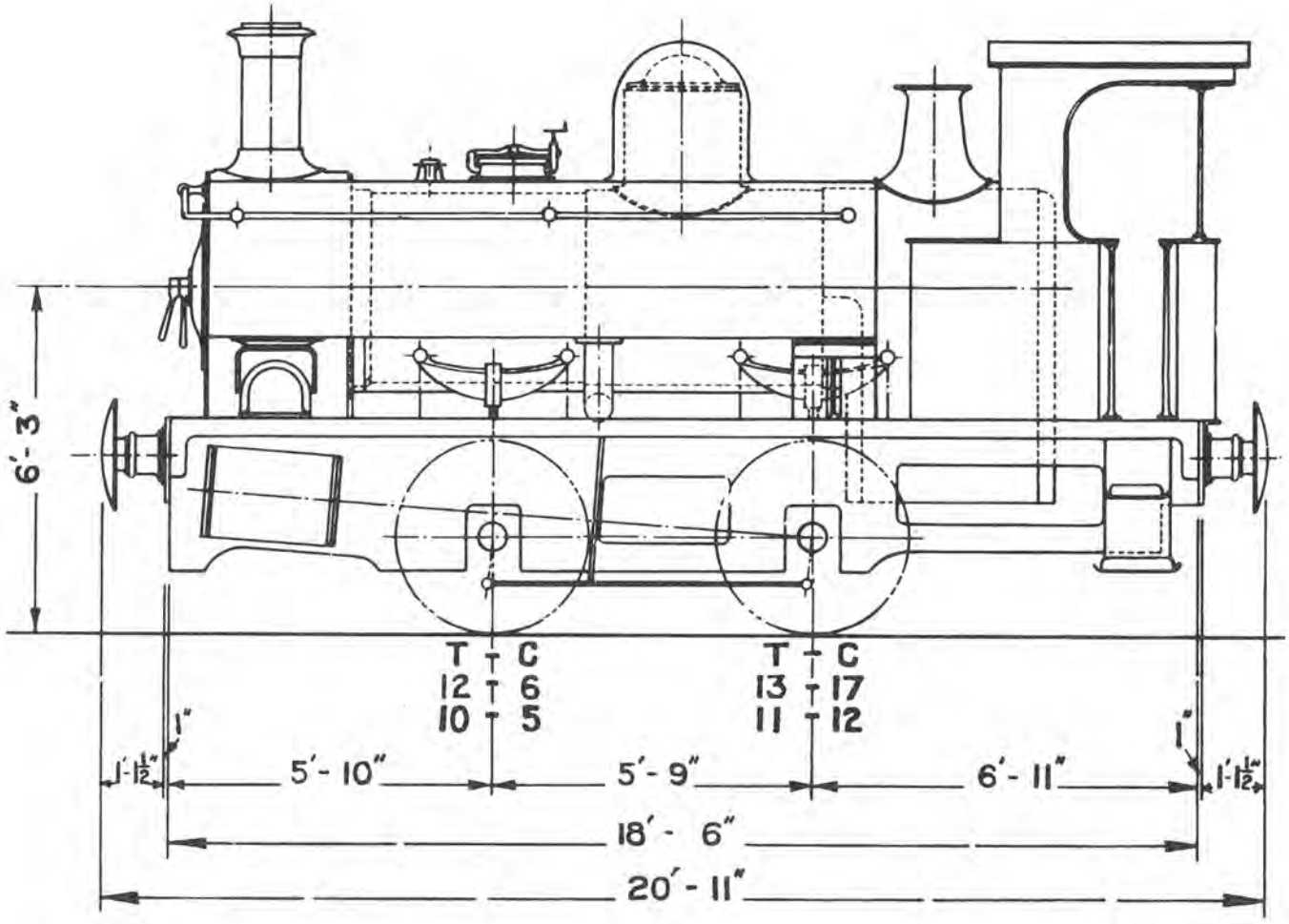

Statistics

No.	Built	Rebuilt as PT	GW No.	Allocation	Withdrawal
5	1903	9/26	795	Swansea Harbour	6/29 Sold RTB Pontardawe & named *Dorothy* Withdrawn from RTB c1962

Dimensions & Weight Diagram - Port Talbot Railway GW 811 – 814 0-6-0ST

Cylinders	16in x 24in
Wheel diameter	4ft 0 ½in
Boiler pressure	160 lbs psi
Heating surface	872.9sqft
Grate area	13.52sqft
Tank capacity	900 gallons
Bunker capacity	1½ tons coal
Weight	44 tons
Axleload	14 tons 15 cwt
Tractive effort	17,410 lbs

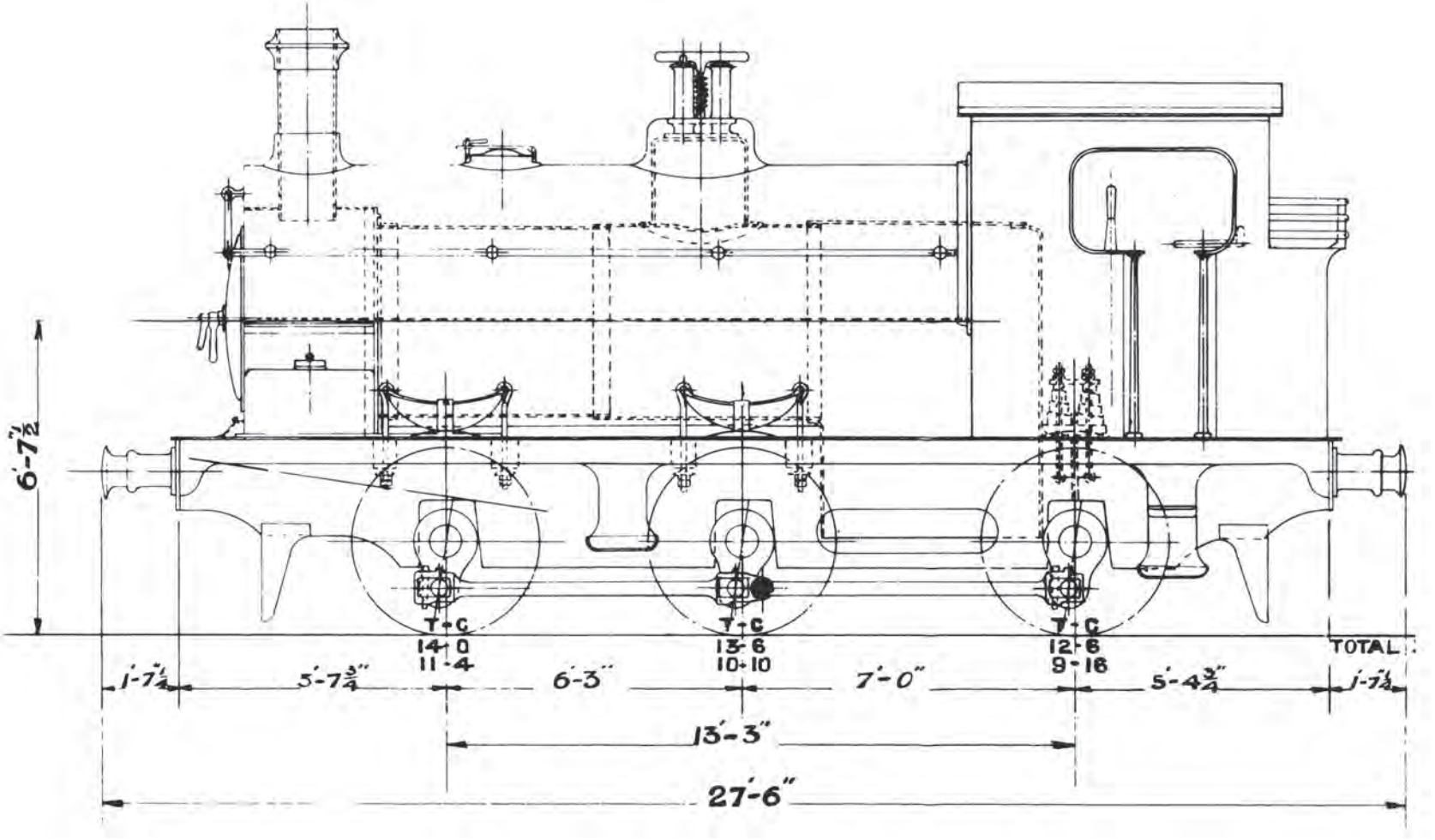

Statistics

No.	Built	Rebuilt as PT GW No.	First allocation	Last allocation	Withdrawal
24	2/00	811	Duffryn Yard	Duffryn Yard	10/33
25	3/00	812	Duffryn Yard	Duffryn Yard	6/34
26	6/00	813	Duffryn Yard	Duffryn Yard	1/34 Sold Backworth Colliery / NCB 1947, withdrawn 1962 and preserved
27	6/00	814	Duffryn Yard	Duffryn Yard	8/30

1366 class

Dimensions & Weight Diagram

Cylinders	16in x 20in
Wheel diameter	3ft 8in
Boiler pressure	165 lbs psi
Heating surface	788sqft
Grate area	10.7sqft
Tank capacity	830 gallons
Weight	35 tons 15 cwt
Axleload	13 tons
Tractive effort	16,320 lbs

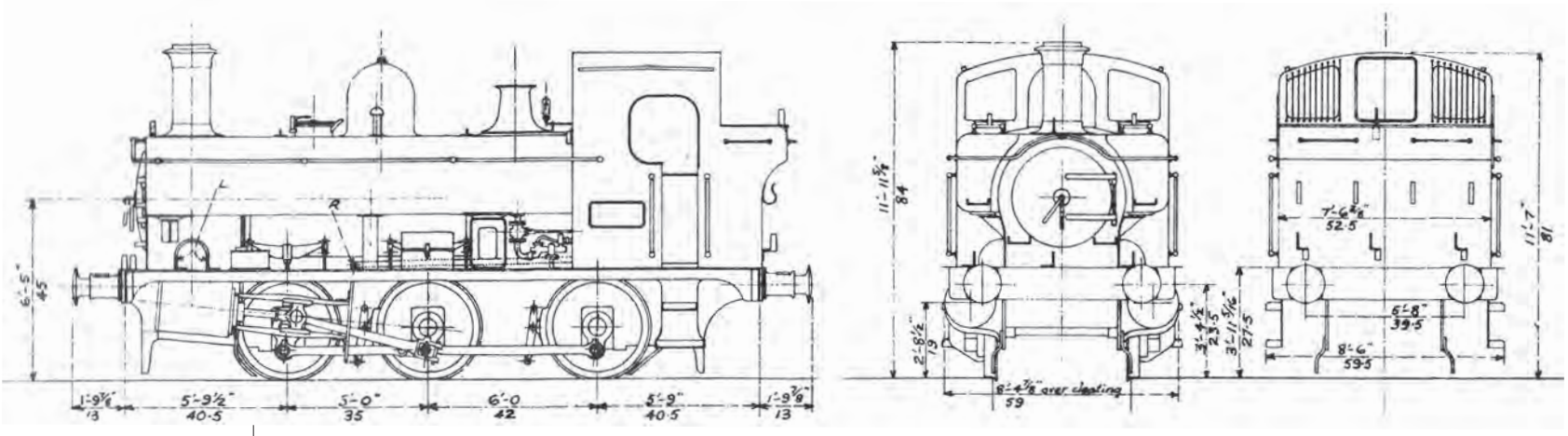

Statistics

No.	Built	First allocation	Last allocation	Withdrawal	Mileage	
1366	2/34	Swindon	Taunton (Bridgwater)	1/61	366,072	
1367	2/34	Swindon*	Wadebridge	10/64	406,869	*Weymouth from 3/35
1368	2/34	Swindon	Wadebridge	10/64	448,221	
1369	2/34	Swindon	Wadebridge	11/64	369,446	Preserved
1370	2/34	Swindon	Weymouth	1/60	313,291	SR from 2/58
1371	2/34	Burry Port	Swindon	11/60	332,361	

57XX (36/37XX, 46XX, 57XX, 67XX, 77XX, 87XX, 96/97XX)

Dimensions & Weight Diagram

Cylinders	17½in x 24in
Wheel diameter	4ft 7½ in
Boiler pressure	200 lbs psi
Heating surface	1,178sqft
Grate area	15.3sqft
Tank capacity	1,200 gallons (1,230 gallons for 9700-9710)
Bunker capacity	3 tons 6 cwt coal
Weight	47½ tons (50¾ tons for 9700-9710)
Axleload	16¾ tons (17 tons 4 cwt for 9700-9710)
Tractive effort	22,515 lbs

Weight diagram – 57XX

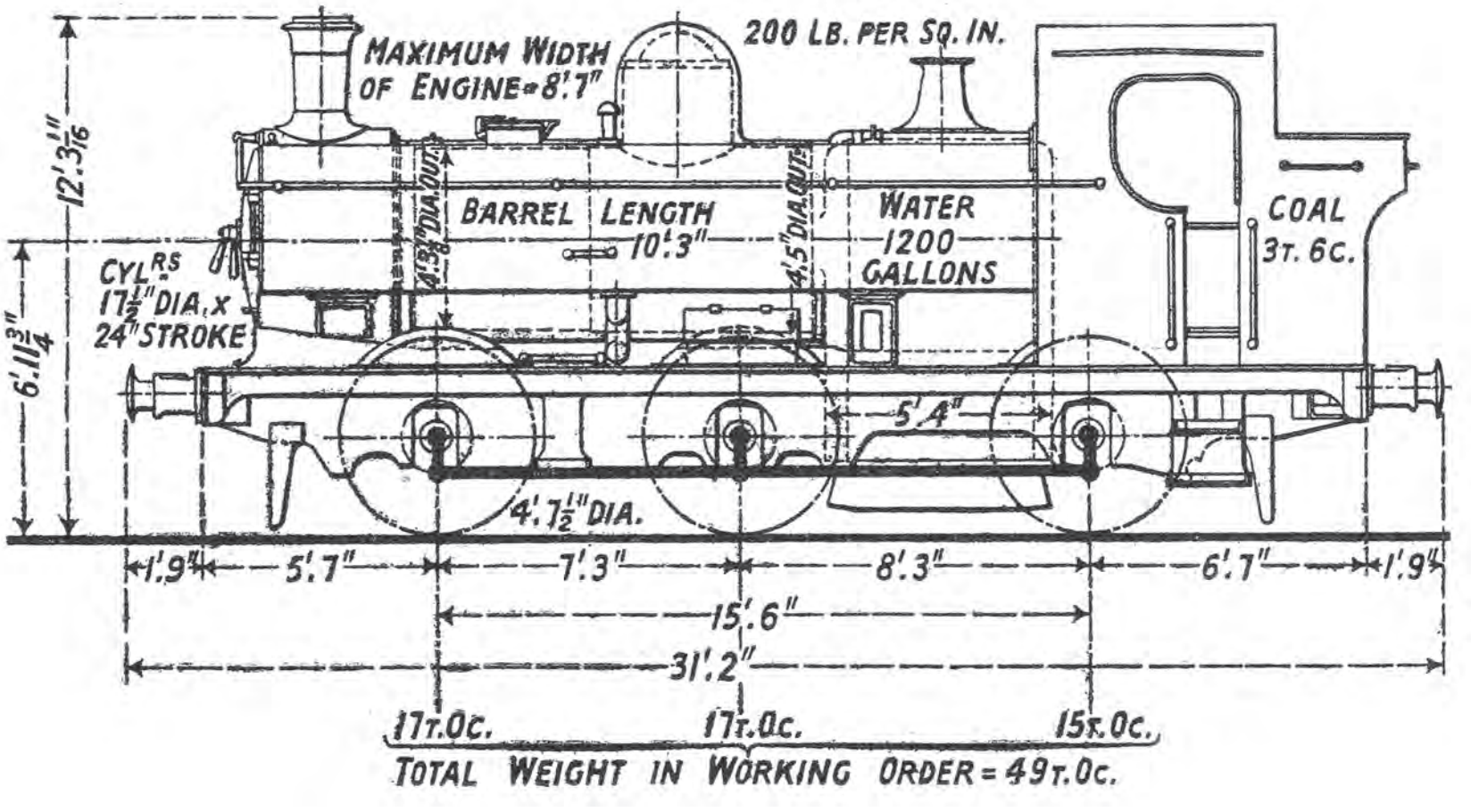

Weight diagram 57XX cab (early series)

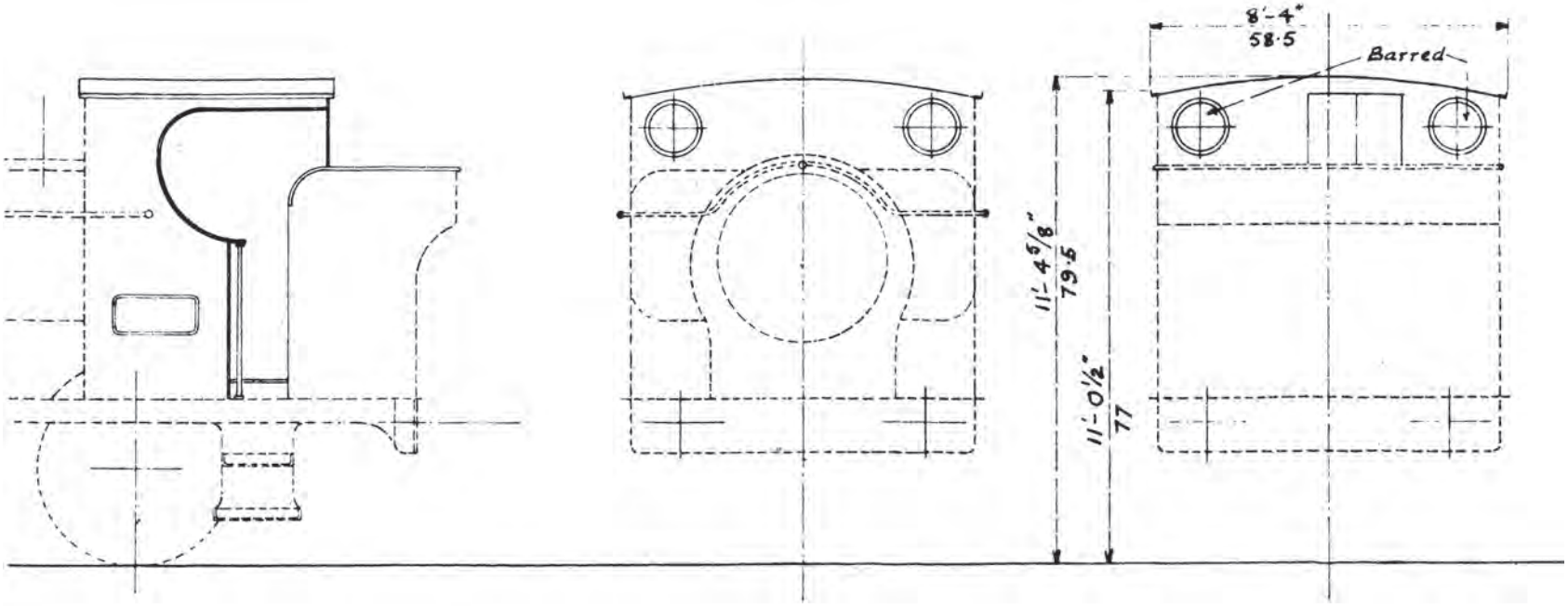

Weight diagram – 8750 series

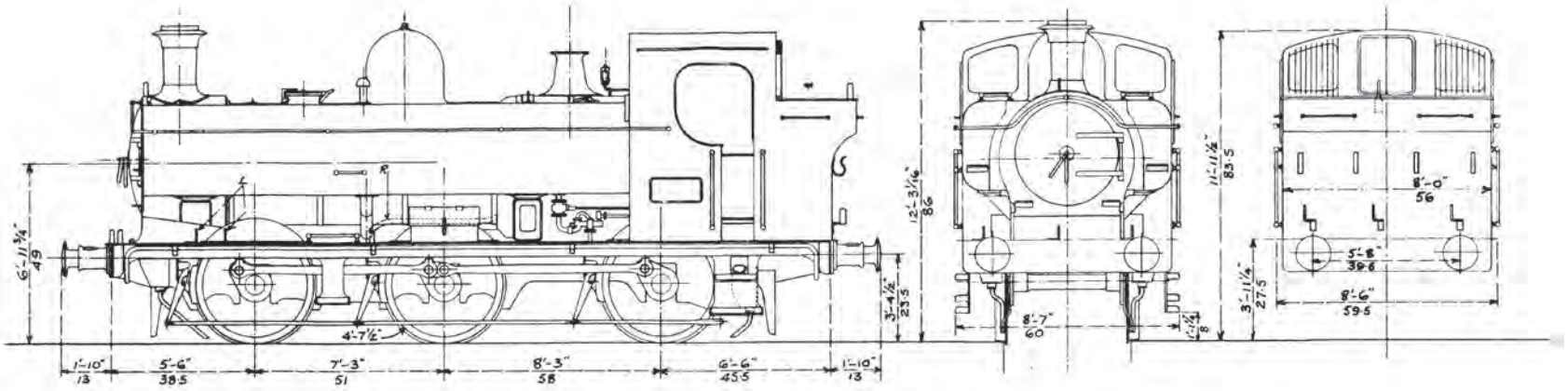

Weight diagram – condensing tank

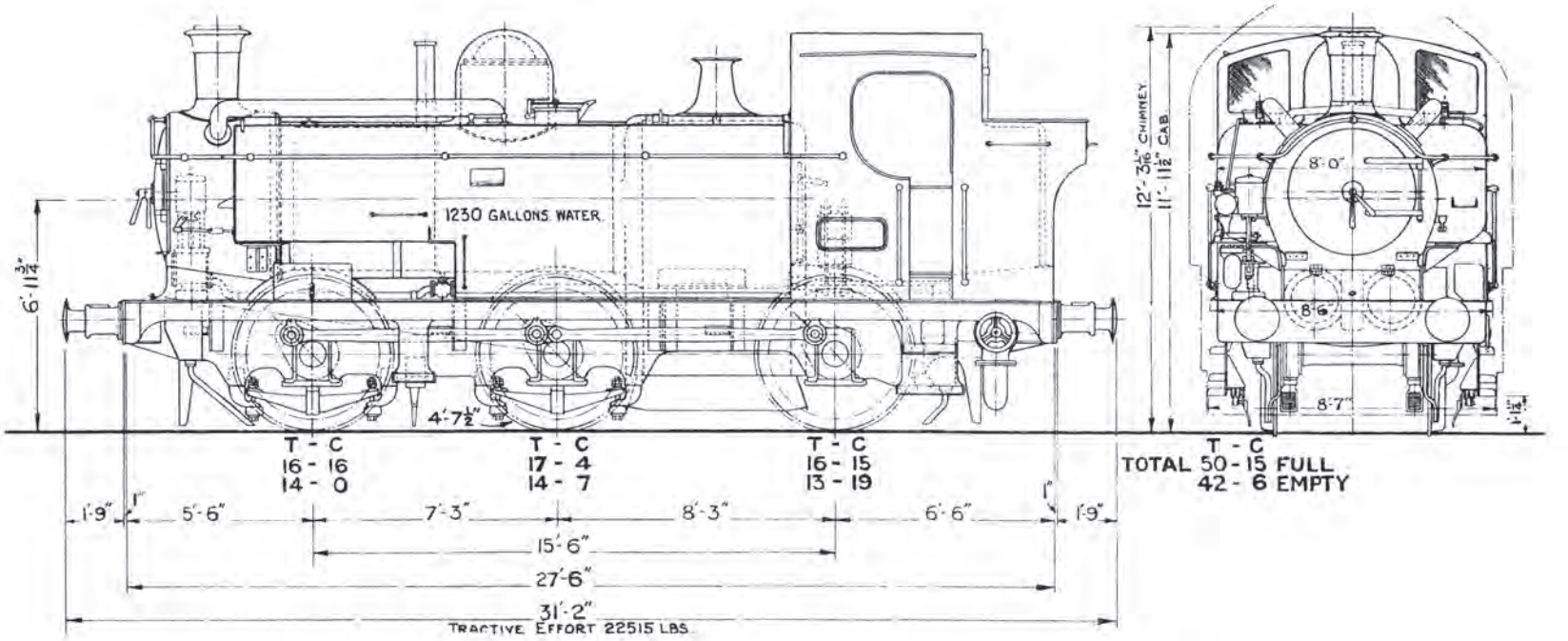

Statistics

No.	Built	First allocation	Last allocation	Withdrawal	Remarks
3600	12/38	Old Oak Common	Neath	12/63	
3601	12/38	Hereford	Stourbridge	10/64	
3602	1/39	Stafford Road	Shrewsbury	2/62	
3603	1/39	Exeter	Neath	7/64	
3604	1/39	Bristol SPM	Bristol SPM	12/63	
3605	1/39	Ebbw Junction	Oxley	10/66	
3606	1/39	Exeter	Bristol Barrow Road	12/62	
3607	2/39	Worcester	Tyseley	10/66	
3608	2/39	Oxford	Southall	6/65	
3609	2/39	Worcester	Gloucester	8/60	
3610	2/39	Aberdare	Aberdare	2/65	
3611	2/39	Neath	Neath	8/62	Neath throughout
3612	3/39	Aberbeeg	Swansea East Dock	10/64	
3613	3/39	Tyseley	Neath	5/64	
3614	3/39	Bristol SPM	Westbury	3/62	
3615	3/39	Stafford Road	Worcester	10/65	
3616	3/39	Cardiff Canton	Gloucester	9/65	
3617	4/39	Llantrisant	Llantrisant	9/64	Llantrisant throughout
3618	4/39	Old Oak Common	Old Oak Common	5/64	
3619	4/39	Old Oak Common	Tyseley	9/66	
3620	5/39	Southall	Southall	6/65	
3621	5/39	Neath	Ebbw Junction	11/64	

No.	Built	First allocation	Last allocation	Withdrawal	Remarks
3622	5/39	Didcot	Old Oak Common	9/64	
3623	5/39	Bristol SPM	Bristol SPM	9/62	
3624	5/39	Tyseley	Neyland	5/62	
3625	5/39	Tyseley	Tyseley	7/66	
3626	6/39	Birkenhead	Duffryn Yard	8/63	
3627	6/39	Aberbeeg	Aberdare	2/63	
3628	6/39	Pontypool Road	Pontypool Road	1/63	Pontypool Road throughout
3629	6/39	Laira	Westbury	1/63	
3630	6/39	Banbury	Croes Newydd	9/62	
3631	7/39	Leamington	Oxley	7/65	
3632	7/39	Bristol SPM	Bristol Barrow Road	12/62	
3633	7/39	Swansea East Dock	Gloucester	10/63	
3634	7/39	Ebbw Junction	Aberdare	7/64	
3635	9/39	Old Oak Common	Tyseley	4/65	
3636	7/39	Tondu	Ebbw Junction	2/62	
3637	7/39	Whitland	Fishguard Goodwick	10/62	
3638	7/39	Brecon	Ebbw Junction	1/61	
3639	10/39	Laira	Neyland	1/63	
3640	10/39	Tondu	Pontypool Road	5/62	
3641	10/39	Swansea East Dock	Swansea East Dock	8/62	Swansea East Dock throughout
3642	10/39	Old Oak Common	Neath	4/65	
3643	10/39	Bristol SPM	Gloucester	11/65	
3644	10/39	Old Oak Common	Radyr	6/65	
3645	11/39	Swindon	Swindon	5/62	Swindon throughout
3646	11/39	Old Oak Common	Old Oak Common	5/64	
3647	11/39	Ebbw Junction	Neath	6/65	
3648	11/39	Old Oak Common	Tondu	12/63	
3649	11/39	Stourbridge	Stourbridge	1/61	
3650	12/39	Tyseley	Neath	9/63	Preserved
3651	12/39	Pontypool Road	Pontypool Road	4/63	Pontypool Road throughout
3652	12/39	Old Oak Common	Neath	10/63	
3653	12/39	Tyseley	Oxford	10/63	
3654	12/39	Neyland	Cardiff East Dock	8/65	Steam heating Swansea to 5/66
3655	1/40	Aberdare	Aberdare	12/62	Aberdare throughout
3656	1/40	Llantrisant	Llantrisant	2/62	Llantrisant throughout
3657	1/40	Tyseley	Neyland	5/61	
3658	1/40	Duffryn Yard	Stourbridge	9/65	
3659	1/40	Old Oak Common	Templecombe	10/65	
3660	2/40	Tyseley	Tyseley	4/63	Tyseley throughout
3661	2/40	Danygraig	Pontypool Road	4/65	
3662	2/40	Ebbw Junction	Ebbw Junction	8/65	Ebbw Junction throughout#
3663	2/40	Reading	Barry	12/62	Sold to NCB Ogilvie Colliery
3664	2/40	Tyseley	Aberbeeg	5/64	
3665	3/40	Chester	Southall	1/64	
3666	3/40	Swindon	Old Oak Common	12/62	
3667	3/40	Stourbridge	Ebbw Junction	5/61	
3668	3/40	Aberbeeg	Barry	7/63	
3669	3/40	Neath	Westbury	9/65	

No.	Built	First allocation	Last allocation	Withdrawal	Remarks
3670	4/40	Cardiff Canton	Cardiff Canton	5/61	
3671	4/40	Yeovil Pen Mill	Llanelli	7/65	
3672	4/40	Old Oak Common	Swansea East Dock	4/64	
3673	4/40	Tyseley	Tyseley	5/64	
3674	4/40	Aberbeeg	Newport Pill	12/62	
3675	6/40	Laira	Gloucester	12/65	
3676	6/40	Bristol SPM	Aberbeeg	5/61	
3677	6/40	Didcot	Oxford	12/65	13 depot allocations
3678	7/40	Landore	Llanelli	12/63	
3679	7/40	Swansea East Dock	Exmouth Junction	3/63	
3680	7/40	Pontypool Road	Llantrisant	5/64	
3681	7/40	Slough	Bath Green Park	3/66	
3682	7/40	Swindon	Worcester	12/65	
3683	7/40	Tondu	Hereford	10/64	
3684	7/40	Swindon	Swindon	5/62	Swindon throughout
3685	12/40	Old Oak Common	Pontypool Road	4/64	
3686	12/40	Taunton	Severn Tunnel Junction	7/65	
3687	1/41	Oxford	Neath	6/65	
3688	1/41	Old Oak Common	Duffryn Yard	9/62	
3689	1/41	Old Oak Common	Barry	5/64	11 depot allocations
3690	2/41	Aberbeeg	Neath	6/65	
3691	2/41	Aberbeeg	Ebbw Junction	4/65	
3692	2/41	Pontypool Road	Neath	5/64	
3693	3/41	Tyseley	Gloucester	7/64	
3694	3/41	Banbury	Ebbw Junction	9/62	
3695	8/41	Aberbeeg	Abercynon	7/64	
3696	8/41	Westbury	Bristol Barrow Road	11/65	
3697	9/41	Reading	Didcot	5/62	
3698	9/41	Llanelli	Llanelli	4/64	Llanelli throughout
3699	9/41	Aberbeeg	Severn Tunnel Junction	2/65	
3700	9/36	Aberbeeg	Severn Tunnel Junction	2/65	11 depot allocations
3701	9/36	Neath	Llanelli	5/64	
3702	10/36	Ebbw Junction	Bristol Barrow Road	4/64	
3703	10/36	Llantrisant	Pontypool Road	5/62	
3704	10/36	Southall	Southall	1/61	Southall throughout
3705	10/36	Penzance	Ebbw Junction	3/65	
3706	10/36	Brecon	Ebbw Junction	11/63	
3707	10/36	Tyseley	Merthyr	9/64	
3708	10/36	Brecon	Ebbw Junction	7/65	
3709	10/36	Ebbw Junction	Croes Newydd	8/66	
3710	10/36	Old Oak Common	Barry	5/63	
3711	11/36	Pontypool Road	Old Oak Common	5/63	Oil burner from 9/62
3712	11/36	Tondu	Neyland	12/63	
3713	11/36	Landore	Llanelli	2/62	
3714	11/36	Ebbw Junction	Ebbw Junction	12/63	Ebbw Junction throughout
3715	1/37	Reading	Old Oak Common	3/65	
3716	1/37	Ebbw Junction	Aberdare	12/63	

No.	Built	First allocation	Last allocation	Withdrawal	Remarks
3717	1/37	Pontypool Road	Radyr	6/65	
3718	2/37	Duffryn Yard	Duffryn Yard	5/62	Duffryn Yard throughout
3719	2/37	Llanelli	Llanelli	1/63	Llanelli throughout
3720	2/37	Bristol SPM	Templecombe	12/63	
3721	2/37	Oxford	Swansea East Dock	4/64	
3722	2/37	Oxford	Ebbw Junction	5/62	
3723	2/37	Oxford	Reading	4/62	
3724	2/37	Swindon	Swindon	5/61	Swindon throughout
3725	6/37	Hereford	Worcester	1/65	
3726	6/37	Pontypool Road	Ebbw Junction	1/62	
3727	6/37	Reading	Barry	4/64	
3728	7/37	Worcester	Radyr	4/64	
3729	7/37	Ebbw Junction	Ebbw Junction	3/63	8 intermediate allocations
3730	7/37	Pontypool Road	Abercynon	11/64	
3731	7/37	Bristol SPM	Neath	5/64	
3732	8/37	Stafford Road	Wellington (Shrop)	5/62	
3733	8/37	Bristol Bath Road	Swansea East Dock	12/63	
3734	8/37	Old Oak Common	Abercynon	4/64	
3735	8/37	Westbury	Westbury	9/65	Westbury throughout
3736	9/37	Westbury	Taunton	3/63	
3737	9/37	Swindon	Gloucester	9/64	
3738	9/37	Old Oak Common	Cardiff East Dock	8/65	Preserved
3739	9/37	Swindon	Westbury	10/64	
3740	9/37	Tyseley	Gloucester	1/59	
3741	9/37	Oxford	Neath	9/62	
3742	9/37	Birkenhead	Bath Green Park	11/64	
3743	9/37	Tyseley	Neath	5/62	
3744	10/37	Wellington (Shrop)	Oxley	8/66	
3745	10/37	Shrewsbury	Gloucester	12/64	
3746	10/37	Chippenham	Westbury	7/64	
3747	10/37	Aberdare	Ebbw Junction	2/65	
3748	10/37	Swindon	Cardiff East Dock	5/64	
3749	10/37	Chester	Croes Newydd	11/65	
3750	11/37	Southall	Old Oak Common	9/62	
3751	11/37	Banbury	Oxford	9/65	
3752	11/37	Llanelli	Didcot	7/64	
3753	11/37	Aberdare	Aberdare	1/65	Aberdare throughout
3754	11/37	Old Oak Common	Shrewsbury	11/65	
3755	11/37	Aberbeeg	Cardiff East Dock	10/62	
3756	11/37	Stafford Road	Tondu	3/63	
3757	12/37	Neath	Neath	5/64	Neath throughout
3758	12/37	Westbury	Bath Green Park	3/66	
3759	12/37	Bristol SPM	Gloucester	12/65	
3760	12/37	Tyseley	Croes Newydd	9/62	11 depot allocations
3761	12/37	Llanelli	Llanelli	5/64	
3762	12/37	Chester	Duffryn Yard	12/63	
3763	12/37	Bristol SPM	Southall	6/65	
3764	12/37	Swindon	Ebbw Junction	1/63	

No.	Built	First allocation	Last allocation	Withdrawal	Remarks
3765	3/38	Bristol SPM	Bristol Barrow Road	7/63	
3766	4/38	Old Oak Common	Aberbeeg	8/63	
3767	4/38	Brecon	Ebbw Junction	10/65	
3768	4/38	Landore	Neath	5/64	
3769	4/38	Slough	Shrewsbury	10/62	
3770	5/38	Reading	Tyseley	4/65	
3771	5/38	Llanelli	Llanelli	1/63	Llanelli throughout
3772	5/38	Tondu	Ebbw Junction	6/65	
3773	5/38	Bristol SPM	Bristol SPM	10/62	Bristol SPM throughout
3774	5/38	Neath	Neath	5/62	Neath throughout
3775	7/38	Stafford Road	Gloucester	12/65	10 depot allocations
3776	7/38	Aberbeeg	Oxley	4/66	
3777	7/38	Llanelli	Llanelli	12/63	Llanelli throughout
3778	7/38	Stafford Road	Oxley	3/64	
3779	7/38	Tondu	Pontypool Road	12/63	
3780	8/38	Westbury	Swindon	12/62	
3781	8/38	Old Oak Common	Llanelli	8/63	
3782	8/38	Shrewsbury	Oxley	10/66	
3783	8/38	Reading	Abercynon	9/65	
3784	8/38	Bristol SPM	Radyr	6/65	
3785	9/38	Danygraig	Swansea East Dock	7/62	
3786	9/38	Stourbridge	Severn Tunnel Junction	3/63	
3787	9/38	Laira	Westbury	1/63	
3788	9/38	Shrewsbury	Oxley	11/65	
3789	10/38	Kidderminster	Croes Newydd	10/65	
3790	10/38	Penzance	Cardiff East Dock	6/65	
3791	10/38	Duffryn Yard	Treherbert	12/63	
3792	10/38	Oxley	Oxley	11/65	
3793	10/38	Stafford Road	Stafford Road	9/58	
3794	10/38	Exeter	Oxford	12/64	
3795	11/38	Yeovil	Bristol Barrow Road	5/63	13 depot allocations
3796	11/38	Ebbw Junction	Severn Tunnel Junction	3/65	
3797	12/38	Landore	Neath	11/64	
3798	12/38	Slough	Bristol Barrow Road	10/64	
3799	12/38	Southall	Southall	1/61	Southall depot throughout
4600	9/41	Hereford	Pontypool Road	7/64	
4601	9/41	Didcot	Nine Elms	11/62	
4602	10/41	Shrewsbury	Oxley	11/64	
4603	10/41	Bristol SPM	Pontypool Road	4/64	
4604	10/41	Southall	Llanelli	7/65	
4605	1/42	Tyseley	Wellington (shrop)	10/62	
4606	1/42	Old Oak Common	Old Oak Common	2/65	
4607	1/42	Bristol SPM	Westbury	9/65	
4608	1/42	Southall	Southall	9/64	Southall depot throughout
4609	1/42	Old Oak Common	Southall	5/65	
4610	2/42	Southall	Exmouth Junction	10/64	
4611	2/42	Tondu	Southall	6/65	

No.	Built	First allocation	Last allocation	Withdrawal	Remarks
4612	2/42	Bristol SPM	Cardiff East Dock	8/65	Preserved
4613	2/42	Worcester	Worcester	12/64	
4614	2/42	Worcester	Gloucester	7/64	
4615	4/42	Old Oak Common	Old Oak Common	10/64	Old Oak Common throughout
4616	4/42	Cardiff Canton	Pontypool Road	10/64	18 depot allocations
4617	4/42	Old Oak Common	Shrewsbury	10/63	
4618	4/42	Aberdare	Barry	10/63	
4619	5/42	Bristol SPM	Bristol Barrow Road	9/64	
4620	5/42	Tyseley	Ebbw Junction	7/65	
4621	5/42	Neath	Severn Tunnel Junction	7/65	
4622	6/42	Cardiff Canton	Southall	5/64	
4623	6/42	Shrewsbury	Cardiff East Dock	6/65	
4624	6/42	Bristol SPM	Gloucester	9/64	
4625	9/42	Kidderminster	Oxley	5/62	
4626	9/42	Bristol SPM	Salisbury	3/64	
4627	9/42	Gloucester	Ebbw Junction	10/64	
4628	10/42	Gloucester	Worcester	5/64	
4629	10/42	Worcester	Gloucester	9/63	
4630	11/42	Cardiff Canton	Bristol Barrow Road	11/65	
4631	11/42	Banbury	Templecombe	6/65	
4632	11/42	Cardiff East Dock	Merthyr	1/62	
4633	11/42	Cardiff Canton	Cardiff East Dock	4/63	
4634	11/42	Tondu	Templecombe	9/64	
4635	12/42	Cardiff East Dock	Tyseley	7/66	
4636	12/42	Westbury	Westbury	9/65	Westbury depot throughout
4637	12/42	Cardiff Canton	Radyr	5/64	
4638	12/42	Stourbridge	Southall	6/65	
4639	12/42	Pontypool Road	Cardiff East Dock	6/65	
4640	12/42	Duffryn Yard	Duffryn Yard	12/63	Duffryn Yard depot throughout
4641	12/42	Gloucester	Kidderminster	5/62	
4642	1/43	Old Oak Common	Pontypool Road	1/64	
4643	1/43	Pontypool Road	Ebbw Junction	4/65	
4644	1/43	Old Oak Common	Fishguard Goodwick	10/63	
4645	2/43	Oxford	Croes Newydd	11/65	
4646	2/43	Banbury	Tyseley	11/66	
4647	3/43	Bristol SPM	Westbury	10/62	
4648	3/43	Tyseley	Tyseley	9/64	
4649	3/43	Reading	Oxford	9/64	
4650	4/43	Slough	Radyr	7/65	
4651	4/43	Swindon	Duffryn Yard	9/63	
4652	4/43	Pontypool Road	Tondu	4/64	
4653	4/43	Laira	Neath	11/64	
4654	4/43	Neyland	Neyland	12/63	Neyland depot throughout
4655	5/43	Laira	Exmouth Junction	6/65	
4656	5/43	Laira	Yeovil	12/62	
4657	5/43	St Blazey	Neath	7/64	
4658	6/43	Truro	Swansea East Dock	5/64	
4659	6/43	Gloucester	Hereford	5/64	

No.	Built	First allocation	Last allocation	Withdrawal	Remarks
4660	6/43	Bristol SPM	Neath	7/64	
4661	10/43	Didcot	Westbury	12/63	
4662	10/43	Newport Pill	Ebbw Junction	9/65	
4663	11/43	Southall	Cardiff East Dock	6/65	
4664	11/43	Worcester	Worcester	7/65	
4665	12/43	Old Oak Common	Stourbridge	6/65	
4666	12/43	Old Oak Common	Exmouth Junction	6/65	
4667	12/43	Old Oak Common	Barry	4/64	
4668	1/44	Pontypool Road	Llanelli	7/65	
4669	1/44	Pontypool Road	Neath	6/65	
4670	1/44	Duffryn Yard	Old Oak Common	10/64	
4671	2/44	Newport Pill	Severn Tunnel Junction	7/65	
4672	3/44	Shrewsbury	Feltham	7/63	
4673	3/44	Southall	Templecombe	6/65	
4674	3/44	Cardiff Canton	Radyr	11/64	
4675	3/44	Tondu	Llanelli	6/65	
4676	4/44	Slough	Llanelli	10/65	
4677	4/44	Ebbw Junction	Neath	3/63	
4678	5/44	Hereford	Hereford	7/64	
4679	5/44	Laira	Radyr	5/65	
4680	6/44	Old Oak Common	Worcester	12/65	
4681	11/44	Duffryn Yard	Bristol Barrow Road	12/63	
4682	11/44	Ebbw Junction	Neath	9/63	
4683	11/44	Tyseley	Croes Newydd	10/65	
4684	12/44	Duffryn Yard	Bristol Barrow Road	7/65	
4685	12/44	Cardiff Canton	Aberbeeg	5/62	
4686	12/44	Cardiff Canton	Nine Elms	8/59	
4687	12/44	Stourbridge	Oxley	11/64	
4688	12/44	Reading	Aberdare	12/63	
4689	12/44	Yeovil	Gloucester	12/65	
4690	1/45	Didcot	Merthyr	10/63	
4691	1/45	Old Oak Common	Templecombe	9/64	
4692	1/45	Reading	Exmouth Junction	9/64	
4693	1/45	Laira	Neath	4/64	
4694	1/45	Danygraig	Exmouth Junction	6/65	
4695	1/45	Southall	Neath	6/64	
4696	2/45	Stourbridge	Tyseley	11/66	
4697	2/45	Swindon	Westbury	7/65	
4698	2/45	Didcot	Gloucester	11/65	
4699	2/45	Didcot	Swansea East Dock	6/64	
5700	12/28	Banbury	Oswestry	3/56	
5701	12/28	Banbury	Westbury	1/58	10 depot allocations
5702	1/29	Duffryn Yard	Llanelli	5/60	
5703	1/29	Neath	Llanelli	2/59	
5704	1/29	Neath	Swansea East Dock	5/60	
5705	1/29	Llanelli	Neath	8/59	
5706	1/29	Ebbw Junction	Aberbeeg	9/61	

No.	Built	First allocation	Last allocation	Withdrawal	Remarks
5707	1/29	Cardiff Canton	Tondu	3/59	
5708	2/29	Tondu	Llantrisant	4/59	
5709	2/29	Cardiff Canton	Ebbw Junction	3/60	
5710	2/29	Cardiff Canton	Cardiff East Dock	6/59	
5711	2/29	Merthyr	Merthyr	1/58	15 depot allocations
5712	2/29	Banbury	Wellington (Shrop)	10/57	14 depot allocations
5713	2/29	Bristol SPM	Fishguard Goodwick	1/60	
5714	2/29	Bristol SPM	Newport Pill	1/58	
5715	2/29	Old Oak Common	Slough	8/58	
5716	3/29	Bristol SPM	Fishguard Goodwick	3/58	
5717	3/29	Old Oak Common	Old Oak Common	5/60	
5718	3/29	Bristol SPM	Westbury	7/58	
5719	3/29	Oxley	Chester	11/58	
5720	3/29	Danygraig	Neath	1/62	
5721	3/29	Merthyr	Taunton	8/59	12 depot allocations
5722	3/29	Llanelli	Llanelli	9/58	
5723	3/29	Tyseley	Chester	11/57	Stationary boiler W.London to 7/59
5724	3/29	Tyseley	Cardiff Cathays	8/57	
5725	12/28	Leamington	Chester	8/58	
5726	12/28	Tyseley	Oswestry	10/59	
5727	1/29	Southall	Cardiff Canton	5/60	10 depot allocations
5728	1/29	Pontypool Road	Duffryn Yard	6/62	
5729	1/29	Aberdare	Aberbeeg	10/57	
5730	2/29	Neath	Danygraig	3/58	
5731	2/29	Duffryn Yard	Aberbeeg	1/60	12 depot allocations
5732	2/29	Ebbw Junction	Ebbw Junction	1/58	
5733	2/29	Ebbw Junction	Newport Pill	8/58	
5734	2/29	Duffryn Yard	Newport Pill	5/59	
5735	2/29	Neath	Didcot	11/57	
5736	3/29	Oxley	Newport Pill	1/58	
5737	3/29	Old Oak Common	Didcot	10/59	
5738	3/29	Oxley	Duffryn Yard	9/59	11 depot allocations
5739	3/29	Tyseley	Chester	8/58	
5740	3/29	Llantrisant	Newport Pill	6/59	
5741	3/39	Aberbeeg	Newport Pill	6/57	
5742	3/29	Tyseley	Croes Newydd	9/58	14 depot allocations
5743	3/29	Swansea East Dock	Danygraig	1/59	
5744	4/29	Old Oak Common	Westbury	4/62	
5745	4/29	Old Oak Common	Wellington (Shrop)	11/59	
5746	4/29	Swansea East Dock	Didcot	9/62	
5747	4/29	Merthyr	Newport Pill	9/59	
5748	4/29	Newport Pill	Neyland	9/60	
5749	4/29	Ebbw Junction	Cardiff East Dock	7/63	
5750	4/29	Neath	Pontypool Road	5/60	
5751	5/29	Old Oak Common	Taunton	4/58	
5752	5/29	Old Oak Common	Didcot	3/57	LT as L91, 3/57 - 11/60
5753	6/29	Old Oak Common	Southall	9/59	

No.	Built	First allocation	Last allocation	Withdrawal	Remarks
5754	6/29	Old Oak Common	Stourbridge	6/60	
5755	5/29	Cardiff East Dock	Slough	7/60	
5756	5/29	Newport Pill	Pontypool Road	9/61	13 depot allocations
5757	5/29	Old Oak Common	Westbury	12/60	LT as L91, 12/60 – 12/67
5758	5/29	Old Oak Common	Newport Pill	5/62	
5759	5/29	Old Oak Common	Pontypool Road	9/60	
5760	6/29	Old Oak Common	Taunton	10/57	
5761	6/29	Old Oak Common	Neath	5/62	
5762	6/29	Old Oak Common	Reading	3/56	
5763	6/29	Old Oak Common	Gloucester	5/60	
5764	7/29	Old Oak Common	Old Oak Common	5/60	OOC depot throughout LT as L95, 5/60 – 6/71, Preserved
5765	7/29	Old Oak Common	Hereford	3/59	
5766	7/29	Old Oak Common	Slough	5/62	
5767	7/29	Southall	Westbury	9/58	
5768	8/29	Newport Pill	Newport Pill	3/61	
5769	8/29	Newport Pill	Bristol SPM	5/60	25 changes of allocation !
5770	9/29	Bristol SPM	Duffryn Yard	12/61	
5771	9/29	Bristol SPM	Bristol SPM	3/61	
5772	9/29	Old Oak Common	Ebbw Junction	6/58	
5773	9/29	Old Oak Common	Neath	9/62	
5774	9/29	Bristol SPM	Croes Newydd	10/62	13 depot allocations
5775	10/29	Neath	Pontypool Road	8/63	LT as L89, 8/64 – 1/70, Preserved
5776	9/29	Newport Pill	Cardiff Canton	5/60	
5777	10/29	Newport Pill	Newport Pill	6/58	
5778	10/29	Duffryn Yard	Neath	7/62	
5779	10/29	Old Oak Common	Bristol SPM	5/62	
5780	12/29	Chester	Taunton	10/61	
5781	12/29	Bristol SPM	Yeovil Pen Mill	9/58	
5782	12/29	Llanelli	Llanelli	11/58	Llanelli depot throughout
5783	12/29	Ebbw Junction	Swansea East Dock	3/62	11 depot allocations
5784	1/30	Bristol SPM	Swindon	6/59	
5785	1/30	Bristol Bath Road	Aberbeeg	12/58	
5786	1/30	Aberdare	Cardiff Canton	4/58	LT as L92, 4/58 - -/69, Preserved
5787	1/30	Severn Tunnel Jcn	Duffryn Yard	10/63	
5788	2/30	Ebbw Junction	Llantrisant	10/59	
5789	2/30	Ebbw Junction	Pontypool Road	5/62	
5790	10/30	Stourbridge	Tredegar	3/59	
5791	10/30	Stourbridge	Kidderminster	4/61	
5792	10/30	Tondu	Pontypool Road	10/56	
5793	10/30	Gloucester	Taunton	4/62	
5794	11/30	Stourbridge	Aberbeeg	12/59	11 depot allocations
5795	11/30	Stourbridge	Stourbridge	4/60	
5796	11/30	Llantrisant	Didcot	3/59	
5797	11/30	Tondu	Aberdare	9/58	
5798	11/30	Old Oak Common	Taunton	9/62	
5799	11/30	Old Oak Common	Southall	7/59	

No.	Built	First allocation	Last allocation	Withdrawal	Remarks
6700	2/30	Cardiff Docks	Swansea East Dock	6/61	
6701	2/30	Cardiff Docks	Duffryn Yard	6/59	
6702	2/30	Cardiff Docks	Swansea East Dock	7/60	
6703	2/30	Cardiff Docks	Cardiff East Dock	1/58	
6704	3/30	Cardiff Docks	Radyr	3/58	
6705	3/30	Cardiff Docks	Cardiff East Dock	1/58	Cardiff Docks throughout
6706	3/30	Cardiff Docks	Cardiff East Dock	1/58	Cardiff Docks throughout
6707	4/30	Cardiff Docks	Newport Pill	6/59	
6708	4/30	Cardiff Docks	Swindon Works	3/59	
6709	4/30	Cardiff Docks	Cardiff East Dock	1/58	
6710	5/30	Cardiff Docks	Newport Pill	8/57	
6711	5/30	Cardiff Docks	Newport Pill	6/59	
6712	6/30	Cardiff Docks	Swansea East Dock	7/60	
6713	6/30	Cardiff Docks	Swansea Victoria	9/57	
6714	6/30	Cardiff Docks	Swansea East Dock	12/63	
6715	7/30	Swansea East Dock	Duffryn Yard	5/58	
6716	7/30	Bristol SPM	Swindon	2/59	
6717	7/30	Duffryn Yard	Swansea Victoria	2/59	
6718	7/30	Duffryn Yard	Swansea Victoria	5/58	
6719	8/30	Duffryn Yard	Swansea East Dock	7/60	
6720	8/30	Duffryn Yard	Swansea East Dock	7/61	
6721	9/30	Stourbridge	Swansea Victoria	2/59	
6722	9/30	Chester	Barry	1/58	
6723	9/30	Chester	Swansea Victoria	2/59	
6724	10/30	Swindon	Swansea East Dock	11/63	
6725	2/30	Newport Pill	Duffryn Yard	10/59	
6726	3/30	Newport Pill	Newport Pill	7/58	Newport Pill throughout
6727	4/30	Newport Pill	Swindon Works	7/59	
6728	3/30	Newport Pill	Newport Pill	6/60	Newport Pill throughout
6729	4/30	Newport Pill	Newport Pill	6/59	Newport Pill throughout
6730	4/30	Newport Pill	Swindon Works	1/60	
6731	5/30	Newport Pill	Newport Pill	5/58	Newport Pill throughout
6732	5/30	Newport Pill	Newport Pill	7/58	Newport Pill throughout
6733	5/30	Newport Pill	Barry	5/58	
6734	6/30	Newport Pill	Swansea Victoria	2/59	
6735	8/30	Newport Pill	Newport Pill	6/59	
6736	7/30	Swindon	Swindon	2/59	
6737	7/30	Newport Pill	Swindon	7/57	
6738	8/30	Swindon	Swansea East Dock	10/62	
6739	8/30	Swindon	Newport Pill	6/62	
6740	10/30	Swindon	Barry	1/58	
6741	10/30	Swindon	Swansea East Dock	12/63	
6742	11/30	Pontypool Road	Swansea East Dock	12/63	
6743	11/30	Ebbw Junction	Newport Pill	4/59	
6744	11/30	Stafford Road	Barry	7/58	
6745	11/30	Tyseley	Newport Pill	6/59	
6746	12/30	Tyseley	Barry	8/58	
6747	12/30	Tyseley	Barry	7/58	

No.	Built	First allocation	Last allocation	Withdrawal	Remarks
6748	12/30	Stourbridge	Barry	1/58	
6749	12/30	Oxley	Swansea East Dock	10/62	
6750	6/47	Barry	Aberdare	1/60	Stationary boiler until 10/60
6751	6/47	Cardiff East Dock	Newport Pill	8/60	
6752	7/47	Barry	Newport Pill	1/61	
6753	8/47	Barry	Swansea East Dock	1/61	
6754	8/47	Barry	Swansea East Dock	12/62	
6755	8/47	Newport Pill	Swansea East Dock	6/62	
6756	8/47	Newport Pill	Swansea East Dock	7/60	
6757	9/47	Severn Tunnel Jcn	Swansea East Dock	12/62	
6758	10/47	Barry	Newport Pill	6/62	
6759	10/47	Newport Pill	Newport Pill	4/60	Newport Pill depot throughout
6760	11/48	Newport Pill	Swansea East Dock	12/63	
6761	11/48	Duffryn Yard	Duffryn Yard	1/61	
6762	11/48	Tondu	Swansea East Cock	3/63	
6763	11/48	Danygraig	Swansea East Dock	12/63	
6764	11/48	Ebbw Junction	Swansea East Dock	12/63	
6765	12/48	Cardiff East Dock	Swansea East Dock	5/64	
6766	1/49	Danygraig	Duffryn Yard	8/60	
6767	1/49	Cardiff East Dock	Swansea East Dock	12/62	
6768	1/49	Duffryn Yard	Swansea East Dock	1/64	
6769	1/49	Barry	Bristol SPM	12/63	
6770	10/50	Cardiff East Dock	Truro	10/62	
6771	10/50	Cardiff East Dock	Barry	3/58	
6772	11/50	Newport Pill	Swansea East Dock	12/63	
6773	11/50	Cardiff East Dock	Swansea East Dock	10/59	
6774	11/50	Barry	Swansea East Dock	12/59	
6775	11/50	Barry	Newport Pill	8/60	
6776	11/50	Neath	Swansea East Dock	1/61	
6777	12/50	Duffryn Yard	Swansea East Dock	5/64	
6778	12/50	Cardiff East Dock	Swansea East Dock	5/62	
6779	12/50	Cardiff East Dock	Swansea Victoria	6/59	
7700	1/30	Gloucester	Kidderminster	5/61	
7701	2/30	Neath	Neath	2/60	
7702	2/30	Duffryn Yard	Leamington	9/60	
7703	2/30	Banbury	Newport Pill	3/60	
7704	2/30	Duffryn Yard	Swansea East Dock	12/60	
7705	3/30	Oxley	Didcot	8/59	11 depot allocations
7706	3/30	Oxley	Duffryn Yard	3/60	
7707	3/30	Worcester	Worcester	11/60	
7708	2/30	Old Oak Common	Reading	6/60	
7709	3/30	Old Oak Common	St Blazey	8/60	
7710	4/30	Old Oak Common	Didcot	9/58	
7711	4/30	Old Oak Common	St Blazey	10/56	LT as L90, 1/57 – 9/61
7712	4/30	Old Oak Common	Pontypool Road	7/60	

No.	Built	First allocation	Last allocation	Withdrawal	Remarks
7713	4/30	Old Oak Common	Taunton	8/62	
7714	4/30	Tyseley	Wrexham Rhosddu	1/59	Preserved
7715	4/30	St Blazey	Duffryn Yard	6/63	LT as L99, 6/63 – 12/69 Preserved
7716	5/30	St Blazey	Exeter	12/59	
7717	5/30	Old Oak Common	Barry	3/60	
7718	5/30	Old Oak Common	Swansea East Dock	4/62	
7719	5/30	Bristol SPM	Hereford	9/60	
7720	5/30	Tondu	Aberdare	5/62	
7721	6/30	Ebbw Junction	Newport Pill	7/62	
7722	6/30	Tondu	Stourbridge	11/60	14 depot allocations
7723	6/30	Ebbw Junction	Gloucester	8/60	
7724	6/30	Gloucester	Pontypool Road	9/62	
7725	12/29	Bristol SPM	Tondu	8/60	
7726	12/29	Bristol SPM	Abercynon	8/60	11 depot allocations
7727	12/29	Westbury	Westbury	1/60	
7728	12/29	Westbury	Bristol SPM	5/60	
7729	12/29	Bristol SPM	Bristol SPM	7/62	Bristol SPM depot throughout
7730	12/29	Westbury	Southall	3/59	
7731	12/29	Old Oak Common	Southall	4/59	
7732	12/29	Old Oak Common	Tondu	10/62	
7733	12/29	Old Oak Common	Abercynon	5/60	
7734	12/29	Old Oak Common	Old Oak Common	4/59	Leamington stationary boiler, 9/59 – 6/65
7735	12/29	Bristol SPM	Tyseley	5/59	
7736	12/29	Bristol SPM	Ebbw Junction	5/62	12 depot allocations
7737	1/30	Landore	Neath	3/60	
7738	1/30	Landore	Ebbw Junction	2/59	13 depot allocations
7739	1/30	Swansea East Dock	Neath	12/62	LT as L98, 12/62 – 11/68
7740	1/30	Duffryn Yard	Pontypool Road	12/60	
7741	2/30	Gloucester	Gloucester	1/62	LT as L96, 1/62 – 12/66
7742	2/30	Swansea East Dock	Neath	7/59	
7743	2/30	Swansea East Dock	Neath	8/59	
7744	2/30	Duffryn Yard	Abercynon	9/62	
7745	1/30	Neath	Llanelli	3/61	
7746	2/30	Cardiff Canton	Tondu	10/59	
7747	2/30	Cardiff Canton	Fishguard Goodwick	2/61	
7748	2/30	Tondu	Westbury	4/61	
7749	2/30	Westbury	Bristol SPM	12/62	LT as L97, 12/62 – 6/68
7750	11/30	Old Oak Common	Gloucester	1/59	11 depot allocations
7751	11/30	Pontypool Road	Barry	10/59	
7752	11/30	Aberdare	Tondu	9/61	LT as L94, 10/61 – 6/71, Preserved
7753	11/30	Duffryn Yard	Tondu	4/62	
7754	11/30	Reading	Wellington (Salop)	1/59	Preserved
7755	11/30	Neath	Aberbeeg	5/62	
7756	11/30	Duffryn Yard	Gloucester	6/61	
7757	11/30	Danygraig	Neath	3/60	

No.	Built	First allocation	Last allocation	Withdrawal	Remarks
7758	12/30	Tyseley	Duffryn Yard	6/60	10 depot allocations
7759	12/30	Oxley	Oxley	3/60	
7760	12/30	Laira	Oxford	1/62	LT as L90, 1/62 – 6/71 Preserved
7761	12/30	Taunton	Exeter	1/61	
7762	1/31	Bristol SPM	Stourbridge	5/62	
7763	1/31	Oxley	Tyseley	11/59	
7764	1/31	Cardiff Canton	Severn Tunnel Jcn	5/62	
7765	1/31	Brecon	Llanelli	7/62	
7766	1/31	Merthyr	Barry	11/60	13 depot allocations
7767	1/31	Llanelli	Neath	3/60	
7768	1/31	Pontypool Road	Ebbw Junction	11/59	
7769	1/31	Neath	Neath	8/59	Neath depot throughout
7770	2/31	Gloucester	Tondu	4/59	
7771	2/31	Ebbw Junction	Pontypool Road	8/61	
7772	2/31	Aberdare	Stourbridge	11/61	13 depot allocations
7773	2/31	Aberdare	Aberdare	12/59	Aberdare depot throughout
7774	2/31	Aberbeeg	Ebbw Junction	11/59	
7775	11/30	Pontypool Road	Cardiff Canton	11/60	11 depot allocations
7776	11/30	Ebbw Junction	Llanelli	1/61	
7777	11/30	Ebbw Junction	Worcester	11/60	
7778	11/30	Old Oak Common	Tondu	12/59	
7779	11/30	Old Oak Common	Barry	10/58	LT as L93, 10/58 – 12/67
7780	11/30	Neath	Weymouth	7/63	
7781	11/30	Ebbw Junction	Ebbw Junction	7/60	
7782	11/30	Bristol Bath Road	Bristol Barrow Road	10/64	
7783	11/30	Bristol SPM	Bristol SPM	9/62	
7784	11/30	Bristol SPM	Westbury	3/62	
7785	11/30	Swansea East Dock	Llanelli	5/62	
7786	11/30	Neath	Neath	5/62	Neath depot throughout
7787	11/30	Duffryn Yard	Aberbeeg	6/61	
7788	11/30	Old Oak Common	Stourbridge	7/62	
7789	11/30	Old Oak Common	Severn Tunnel Jcn	11/59	
7790	11/30	Bristol SPM	Duffryn Yard	12/62	
7791	11/30	Old Oak Common	Old Oak Common	12/59	
7792	12/30	Bristol SPM	Swindon	11/57	
7793	12/30	Bristol SPM	Severn Tunnel Jcn	4/60	
7794	12/30	Bristol SPM	Ebbw Junction	11/60	
7795	12/30	Bristol SPM	Bristol SPM	2/58	
7796	12/30	Oxley	Pontypool Road	2/62	
7797	12/30	Tyseley	Oxley	10/59	
7798	12/30	Slough	Tondu	5/61	
7799	12/30	Old Oak Common	Neath	5/62	
8700	2/31	Rebuilt as condensing locomotive in 3/32 and renumbered as 9700 in 1934			
8700	3/34	Tyseley	Tyseley	2/62	
8701	2/31	Kidderminster	Gloucester	3/63	
8702	2/31	Swindon	Hereford	5/64	

No.	Built	First allocation	Last allocation	Withdrawal	Remarks
8703	2/31	Bristol SPM	Bristol SPM	1/58	Bristol SPM depot throughout
8704	2/31	Chester	Stourbridge	2/60	
8705	2/31	Chester	Aberbeeg	4/61	
8706	2/31	Llanelli	Llanelli	7/61	
8707	2/31	Llanelli	Pontypool Road	7/64	
8708	2/31	Llanelli	Llanelli	5/60	
8709	2/31	Laira	Pontypool Road	9/62	12 depot allocations
8710	2/31	Severn Tunnel Jcn	Tondu	3/63	
8711	2/31	Ebbw Junction	Swindon	3/62	12 depot allocations
8712	3/31	Pontypool Road	Tondu	1/63	
8713	3/31	Bristol SPM	Tyseley	3/62	
8714	3/31	Bristol SPM	Swansea East Dock	11/64	11 depot allocations
8715	3/31	Llanelli	Neath	4/62	
8716	3/31	Tondu	Pontypool Road	4/64	
8717	3/31	Gloucester	Abercynon	7/64	
8718	3/31	Gloucester	Shrewsbury	7/66	
8719	3/31	Newton Abbot	St Blazey	5/62	
8720	3/31	Danygraig	Didcot	9/64	
8721	3/31	Reading	Tondu	7/61	
8722	3/31	Westbury	Cardiff Canton	4/61	
8723	3/31	Ebbw Junction	Aberdare	7/64	
8724	3/31	Pontypool Road	Duffryn Yard	7/62	
8725	11/30	Birkenhead	Bristol Barrow Road	10/62	12 depot allocations
8726	12/30	Tyseley	Llanelli	4/61	
8727	12/30	Reading	Croes Newydd	4/62	
8728	12/30	Old Oak Common	Nine Elms	7/63	
8729	1/31	Old Oak Common	Gloucester	12/62	
8730	2/31	Bristol SPM	Abercynon	7/62	
8731	2/31	Kidderminster	Southall	7/62	11 depot allocations
8732	2/31	Neath	Swansea East Dock	4/64	
8733	2/31	Gloucester	St Blazey	2/62	
8734	3/31	Chester	Croes Newydd	3/62	10 depot allocations
8735	3/31	Aberbeeg	Abercynon	1/62	
8736	3/31	Merthyr	Llanelli	3/62	11 depot allocations
8737	4/31	Brecon	Neath	12/62	
8738	4/31	Cardiff Canton	Neyland	3/63	14 depot allocations
8739	4/31	Ebbw Junction	Oxley	11/64	11 depot allocations
8740	5/31	Reading	Tondu	2/61	
8741	5/31	Swindon	Bristol SPM	5/62	
8742	5/31	Reading	Stourbridge	9/62	
8743	6/31	Cardiff Canton	Old Oak Common	6/64	
8744	6/31	Westbury	Westbury	10/62	
8745	6/31	Worcester	Gloucester	8/65	11 depot allocations
8746	6/31	Bristol SPM	Duffryn Yard	12/62	10 depot allocations
8747	7/31	Bristol SPM	Neath	6/62	10 depot allocations
8748	7/31	Ebbw Junction	Tondu	9/62	11 depot allocations
8749	7/31	Whitland	Gloucester	10/64	
8750	9/31	Old Oak Common	Swansea East Dock	5/62	

No.	Built	First allocation	Last allocation	Withdrawal	Remarks
8751	10/33	Old Oak Common	Ebbw Junction	12/62	
8752	10/33	Old Oak Common	Southall	1/63	
8753	10/33	Old Oak Common	Old Oak Common	2/62	
8754	10/33	Old Oak Common	Old Oak Common	11/60	Old Oak Common throughout
8755	10/33	Old Oak Common	Old Oak Common	12/57	
8756	10/33	Old Oak Common	Old Oak Common	10/62	Old Oak Common throughout
8757	10/33	Southall	Old Oak Common	9/62	
8758	11/33	Oxford	Southall	1/59	
8759	10/33	Old Oak Common	Old Oak Common	1/63	Old Oak Common throughout
8760	10/33	Old Oak Common	Neath	1/62	
8761	10/33	Old Oak Common	Old Oak Common	5/62	
8762	10/33	Old Oak Common	Old Oak Common	8/61	Old Oak Common throughout
8763	10/33	Old Oak Common	Old Oak Common	8/62	Old Oak Common throughout
8764	10/33	Old Oak Common	Barry	5/62	
8765	1/34	Old Oak Common	Old Oak Common	9/62	Old Oak Common throughout
8766	12/33	Reading	Ebbw Junction	7/63	
8767	12/33	Old Oak Common	Croes Newydd	7/66	
8768	12/33	Didcot	Old Oak Common	9/64	
8769	12/33	Old Oak Common	Southall	4/61	
8770	1/34	Old Oak Common	Southall	12/62	
8771	1/34	Old Oak Common	Old Oak Common	7/62	
8772	1/34	Old Oak Common	Duffryn Yard	8/61	
8773	1/34	Old Oak Common	Old Oak Common	10/62	Old Oak Common throughout
8774	1/34	Southall	Cardiff Canton	8/61	
8775	1/34	Neath	Neath	12/61	Neath depot throughout
8776	1/34	Pontypool Road	Barry	12/62	
8777	1/34	Ebbw Junction	Carmarthen	4/61	
8778	2/34	Tondu	Ebbw Junction	8/60	
8779	2/34	Westbury	Swindon	2/62	
8780	2/34	Landore	Radyr	7/62	
8781	2/34	Llanelli	Ebbw Junction	12/62	
8782	2/34	Neath	Llanelli	11/61	
8783	2/34	St Blazey	Llanelli	6/63	
8784	2/34	Tyseley	Neath	4/62	
8785	2/34	Landore	Llanelli	12/63	
8786	1/34	Ebbw Junction	Nine Elms	6/63	12 depot allocations
8787	2/34	Stourbridge	Hereford	8/61	
8788	2/34	Aberbeeg	Neath	5/62	
8789	3/34	Landore	Landore	6/61	Landore depot throughout
8790	3/34	Bristol SPM	Bristol SPM	5/62	
8791	4/34	Stourbridge	Neath	3/63	
8792	3/34	Stafford Road	Stourbridge	2/62	
8793	4/34	Bristol SPM	Worcester	12/64	
8794	4/34	Ebbw Junction	Nine Elms	7/63	
8795	4/34	Bristol Bath Road	Bristol Barrow Road	7/65	
8796	4/34	Llantrisant	Stafford Road	4/61	
8797	5/34	Tyseley	Stourbridge	4/62	
8798	5/34	Oxley	Swansea East Dock	6/61	

No.	Built	First allocation	Last allocation	Withdrawal	Remarks
8799	5/34	Pontypool Road	Weymouth	11/62	
9600	3/45	Swindon	Ebbw Junction	9/65	Preserved
9601	5/45	Yeovil	Bristol Barrow Road	12/64	
9602	6/45	Fishguard Goodwick	Treherbert	3/65	
9603	6/45	Fishguard Goodwick	Barry	12/63	
9604	6/45	Bristol SPM	Swindon	12/62	
9605	6/45	Bristol SPM	Westbury	9/65	
9606	7/45	Bristol SPM	Gloucester	10/64	
9607	7/45	Shrewsbury	Aberdare	4/64	
9608	7/45	Tyseley	Stourbridge	7/66	
9609	7/45	Aberdare	Llanelli	10/65	
9610	8/45	Tyseley	Croes Newydd	9/66	
9611	9/45	Oxford	Radyr	4/65	
9612	9/45	Westbury	Westbury	12/63	Westbury depot throughout
9613	10/45	Stourbridge	Stourbridge	10/65	
9614	10/45	Brecon	Stourbridge	7/66	
9615	10/45	Westbury	Radyr	7/65	
9616	12/45	Llantrisant	Severn Tunnel Junction	8/65	
9617	11/45	Duffryn Yard	Neath	6/65	
9618	11/45	Merthyr	Merthyr	12/63	Merthyr depot throughout
9619	11/45	Hereford	Severn Tunnel Junction	7/65	
9620	11/45	Bristol SPM	Gloucester	7/64	
9621	12/45	Stafford Road	Llanelli	10/64	
9622	12/45	Merthyr	Radyr	7/65	
9623	12/45	Taunton	Bristol Barrow Road	7/65	
9624	12/45	Wellington (Shrop)	Stourbridge	1/65	
9625	12/45	Swansea East Dock	Neath	6/65	
9626	12/45	Bristol SPM	Worcester	12/65	
9627	12/45	Neath	Neath	7/62	Neath depot throughout
9628	12/45	Weymouth	Westbury	3/63	
9629	12/45	Cardiff Canton	Pontypool Road	10/64	Preserved
9630	1/46	Wellington (Shrop)	Croes Newydd	9/66	
9631	1/46	Barry	Llanelli	6/65	
9632	1/46	Ebbw Junction	Abercynon	11/64	
9633	2/46	Newton Abbot	Duffryn Yard	10/63	
9634	1/46	Duffryn Yard	Neath	5/64	
9635	2/46	Tyseley	Taunton	6/64	
9636	2/46	Stourbridge	Wellington (Shrop)	10/63	
9637	2/46	Ebbw Junction	Neath	9/64	
9638	2/46	Merthyr	Merthyr	12/63	
9639	2/46	Wellington (Shrop)	Croes Newydd	9/65	
9640	3/46	Slough	Oxley	7/66	
9641	3/46	Southall	Croes Newydd	10/66	
9642	4/46	Westbury	Old Oak Common	11/64	Preserved
9643	5/46	Merthyr	Merthyr	5/62	Merthyr depot throughout
9644	5/46	Ebbw Junction	Radyr	6/65	

No.	Built	First allocation	Last allocation	Withdrawal	Remarks
9645	5/46	Swansea East Dock	Fishguard Goodwick	10/63	
9646	5/46	Newton Abbot	Stourbridge	5/65	
9647	7/46	Exeter	Templecombe	6/65	
9648	7/46	Cardiff Canton	Llanelli	7/64	
9649	8/46	Tondu	Ebbw Junction	7/65	
9650	7/46	Pontypool Road	Pontypool Road	12/64	Pontypool Road throughout
9651	8/46	Birkenhead	Cardiff East Dock	7/65	
9652	11/46	Neyland	Llanelli	1/63	
9653	11/46	Slough	Oxford	7/65	
9654	11/46	Oxford	Oxford	10/64	Oxford depot throughout
9655	12/46	St Blazey	Pontypool Road	5/64	
9656	12/46	Croes Newydd	Severn Tunnel Junction	11/65	
9657	11/46	Shrewsbury	Shrewsbury	4/66	
9658	11/46	Old Oak Common	Oxley	10/66	
9659	12/46	Old Oak Common	Old Oak Common	6/65	Old Oak Common throughout
9660	12/46	Tondu	Neath	11/64	
9661	12/46	Old Oak Common	Oxley	11/64	
9662	5/48	Ebbw Junction	Ebbw Junction	9/65	
9663	4/48	Taunton	Taunton	9/64	Taunton depot throughout
9664	7/48	Ebbw Junction	Newport Pill	5/64	
9665	5/48	Bristol SPM	Hereford	2/63	
9666	5/48	Neath	Ebbw Junction	9/65	
9667	5/48	Ebbw Junction	Radyr	6/65	
9668	6/48	Newton Abbot	Abercynon	12/63	
9669	6/48	Croes Newydd	Croes Newydd	1/66	
9670	6/48	Taunton	Yeovil Town	6/65	
9671	6/48	Laira	Cardiff East Dock	3/65	
9672	7/48	Shrewsbury	Abercynon	12/65	
9673	2/49	Laira	St Blazey	5/60	
9674	2/49	Tondu	Westbury	4/64	
9675	3/49	Merthyr	Ebbw Junction	10/65	
9676	3/49	Cardiff Cathays	Cardiff East Dock	6/65	
9677	3/49	Cardiff East Dock	Llanelli	11/64	
9678	4/49	Newton Abbot	Cardiff East Dock	6/65	
9679	4/49	Cardiff East Dock	Merthyr	11/64	
9680	5/49	Tyseley	Gloucester	12/65	
9681	5/49	Tondu	Cardiff East Dock	8/65	Preserved
9682	5/49	Tyseley	Radyr	8/65	Preserved
9700*	1/34	Old Oak Common	Old Oak Common	10/63	ex 8700, OOC depot throughout
9701*	9/33	Old Oak Common	Old Oak Common	1/61	
9702*	9/33	Old Oak Common	Old Oak Common	5/62	
9703*	9/33	Old Oak Common	Old Oak Common	12/61	OOC depot throughout
9704*	10/33	Old Oak Common	Old Oak Common	11/63	OOC depot throughout
9705*	10/33	Old Oak Common	Old Oak Common	10/61	
9706*	12/33	Old Oak Common	Old Oak Common	11/64	OOC depot throughout
9707*	11/33	Old Oak Common	Southall	9/64	Paper transfer to Taunton 24/8/64

No.	Built	First allocation	Last allocation	Withdrawal	Remarks
9708*	12/33	Old Oak Common	Old Oak Common	1/59	OOC throughout
9709*	12/33	Old Oak Common	Old Oak Common	5/62	
9710*	12/33	Old Oak Common	Old Oak Common	10/64	OOC depot throughout

* Fitted with condensing apparatus for use over LT underground lines

9711	6/34	Laira	Bristol Barrow Road	7/65	
9712	6/34	Ebbw Junction	Aberdare	9/62	
9713	6/34	Severn Tunnel Jcn	Nine Elms	7/63	
9714	6/34	Stafford Road	Fishguard Goodwick	11/61	
9715	7/34	Shrewsbury	Nine Elms	7/63	Withdrawn on arrival
9716	8/34	Taunton	Neath	6/65	
9717	7/34	Newton Abbot	Hereford	12/62	
9718	7/34	Exeter	Taunton	5/62	
9719	7/34	Stafford Road	Stourbridge	7/62	
9720	12/34	Yeovil	Swindon	11/61	
9721	12/34	Bristol SPM	Swindon	6/62	
9722	12/34	Oxford	Slough	7/62	
9723	12/34	Aberbeeg	Abercynon	7/62	
9724	12/34	Tyseley	Stourbridge	1/66	
9725	12/34	Old Oak Common	Old Oak Common	12/62	OOC depot throughout
9726	12/34	Old Oak Common	Southall	6/65	
9727	12/34	Stafford Road	Barry	12/62	
9728	12/34	Stourbridge	Abercynon	5/62	14 depot allocations
9729	12/34	Bristol SPM	Westbury	10/64	
9730	1/35	Stafford Road	Pontypool Road	5/64	
9731	1/35	Reading	Aberdare	5/63	
9732	2/35	Westbury	Swansea East Dock	4/64	
9733	1/35	Bristol SPM	Stourbridge	9/65	
9734	2/35	Neath	Neath	7/64	Neath depot throughout
9735	2/35	Duffryn Yard	Duffryn Yard	3/61	
9736	2/35	Duffryn Yard	Duffryn Yard	6/61	Duffryn Yard throughout
9737	2/35	Duffryn Yard	Duffryn Yard	12/60	Duffryn Yard throughout
9738	1/35	Landore	Tondu	1/62	
9739	2/35	Stafford Road	Oxley	7/61	
9740	2/35	Banbury	Swindon	2/62	
9741	2/35	Stafford Road	Wellington (Shrop)	8/62	
9742	2/35	Leamington	Neath	9/64	
9743	2/35	Llanelli	Neath	5/64	
9744	2/35	Neath	Swansea East Dock	1/63	
9745	2/35	Severn Tunnel Jcn	Ebbw Junction	6/61	
9746	5/35	Cardiff Canton	Swansea East Dock	4/64	
9747	3/35	Banbury	Aberdare	1/63	
9748	3/35	Stafford Road	Swansea East Dock	1/64	14 depot allocations
9749	3/35	Southall	Swansea East Dock	11/60	
9750	6/35	Taunton	Neath	5/62	
9751	6/35	Taunton	Old Oak Common	6/61	
9752	6/35	Stafford Road	Swansea East Dock	12/63	

No.	Built	First allocation	Last allocation	Withdrawal	Remarks
9753	6/35	Tyseley	Tyseley	5/65	
9754	6/35	Old Oak Common	Yeovil Town	6/65	
9755	6/35	Southall	Old Oak Common	5/63	
9756	7/35	Neath	Weymouth	9/62	
9757	7/35	Southall	Swansea East Dock	8/62	
9758	7/35	Reading	Old Oak Common	5/62	
9759	7/35	Yeovil	Abercynon	10/62	
9760	10/35	Swansea East Dock	Duffryn Yard	12/63	
9761	10/35	Llanelli	Swansea East Dock	10/62	
9762	10/35	Old Oak Common	Westbury	5/61	
9763	10/35	Old Oak Common	Old Oak Common	9/63	
9764	10/35	Bristol SPM	Yeovil	8/63	
9765	10/35	St Blazey	Exeter	12/61	
9766	10/35	Duffryn Yard	Neath	7/64	
9767	10/35	Stafford Road	Stourbridge	6/61	
9768	10/35	Tyseley	Oxley	12/64	
9769	10/35	Stafford Road	Westbury	3/63	13 depot allocations
9770	4/36	Taunton	Bath Green Park	12/63	
9771	4/36	Bristol SPM	Bristol SPM	5/61	
9772	4/36	Bristol SPM	Swindon	1/59	
9773	3/36	Bristol SPM	Oxford	12/65	
9774	4/36	Banbury	Tyseley	11/66	14 depot allocations
9775	4/36	Landore	Barry	12/62	
9776	5/36	Landore	Oxley	4/66	
9777	5/36	Swansea East Dock	Neath	5/64	
9778	5/36	Severn Tunnel Jcn	Radyr	11/64	
9779	5/36	Neyland	Neath	2/64	
9780	7/36	Tondu	Radyr	7/65	
9781	5/36	Duffryn Yard	Didcot	5/61	
9782	7/36	Stafford Road	Stourbridge	11/64	
9783	7/36	Duffryn Yard	Neath	5/62	
9784	7/36	Bristol SPM	Old Oak Common	5/63	
9785	5/36	Neath	Duffryn Yard	9/62	
9786	5/36	Neath	Neath	5/64	Neath depot throughout
9787	5/36	Llanelli	Treherbert	9/64	
9788	5/36	Neath	Neath	4/64	
9789	5/36	Old Oak Common	Oxford	12/65	
9790	6/36	Swindon	Westbury	9/65	
9791	6/36	Old Oak Common	Didcot	1/64	
9792	6/36	Brecon	Neath	4/64	Sold to NCB Maerdy Colliery
9793	6/36	Stafford Road	Croes Newydd	8/63	
9794	6/36	Stourbridge	Barry	9/64	11 depot allocations
9795	9/36	Westbury	Swindon	11/60	
9796	10/36	Ebbw Junction	Pontypool Road	2/65	
9797	10/36	Ebbw Junction	Pontypool Road	9/62	
9798	10/36	Tyseley	Barry	10/64	
9799	10/36	Duffryn Yard	Duffryn Yard	10/63	

54XX, 64XX, 74XX
Dimensions & Weight Diagram
54XX (auto-fitted)

Cylinders	16½in x 24in
Wheel diameter	5ft 2in
Boiler pressure	165 lbs psi
Heating surface	1,086sqft
Grate area	16.76sqft
Tank capacity	1,100 gallons
Bunker capacity	3 tons 4 cwt coal
Weight	46 tons 12 cwt
Axleload	15 tons 12 cwt
Tractive effort	14,780 lbs

64XX (auto-fitted)

As for 54XX except:

Wheel diameter	4ft 7½in
Tractive effort	16,510 lbs

74XX

As far 64XX except:

Boiler pressure	180 lbs psi
Weight	45 tons 9 cwt
Axleload	15 tons 7 cwt
Tractive effort	18,010 lbs

Weight diagram – 54XX

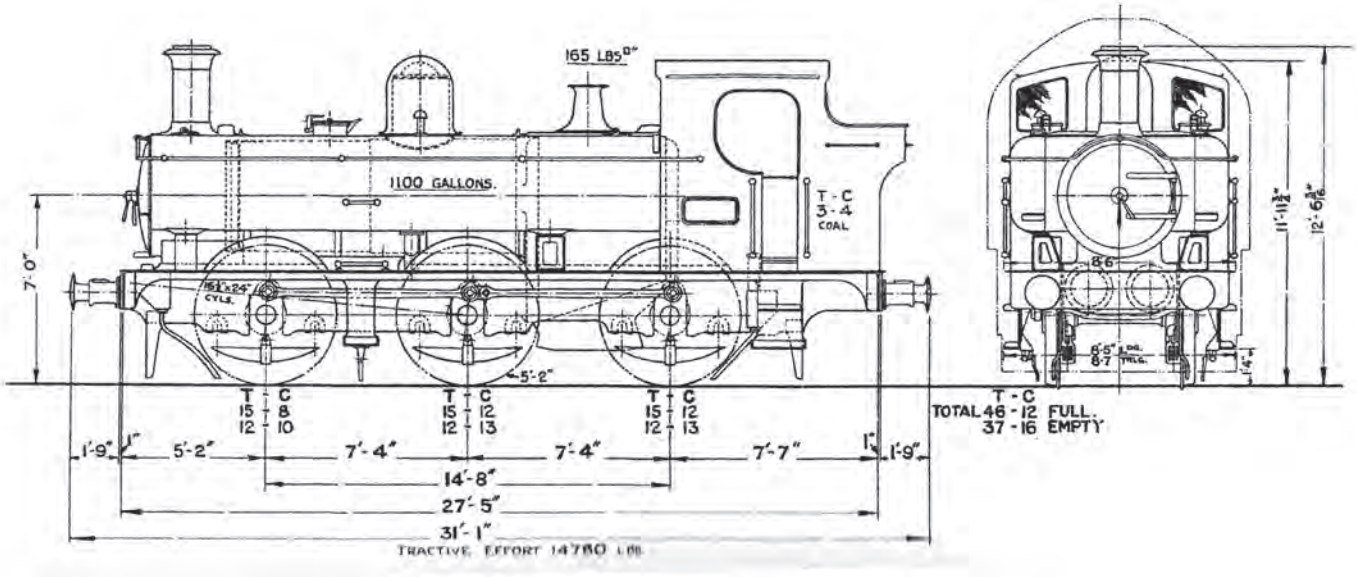

Weight diagram – 64XX

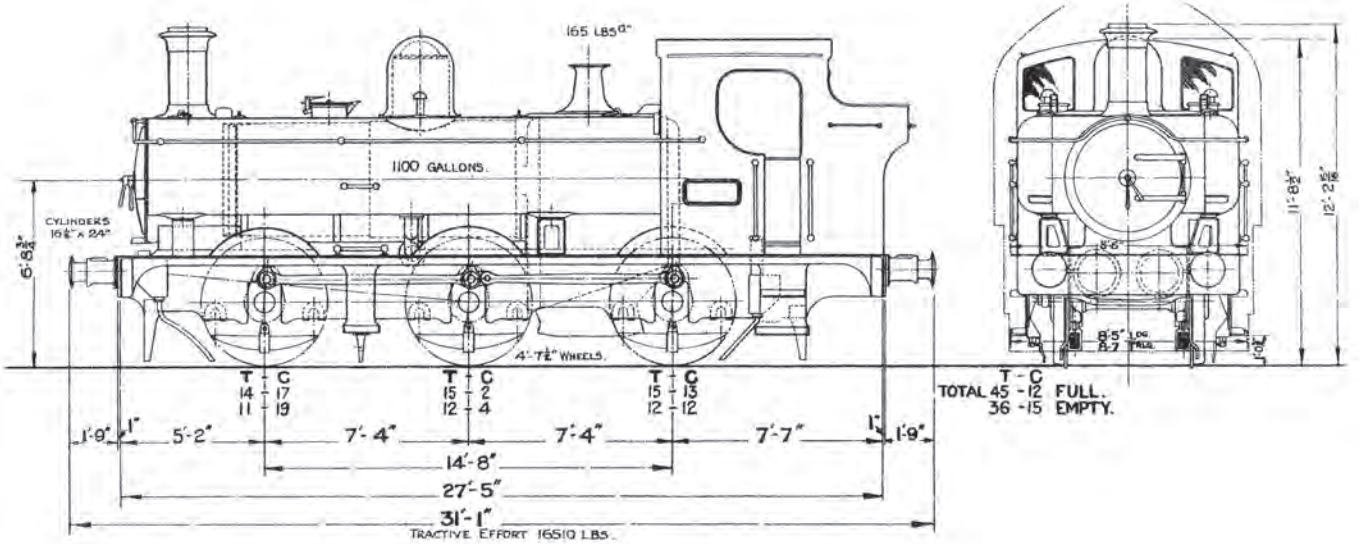

Weight diagram – 74XX

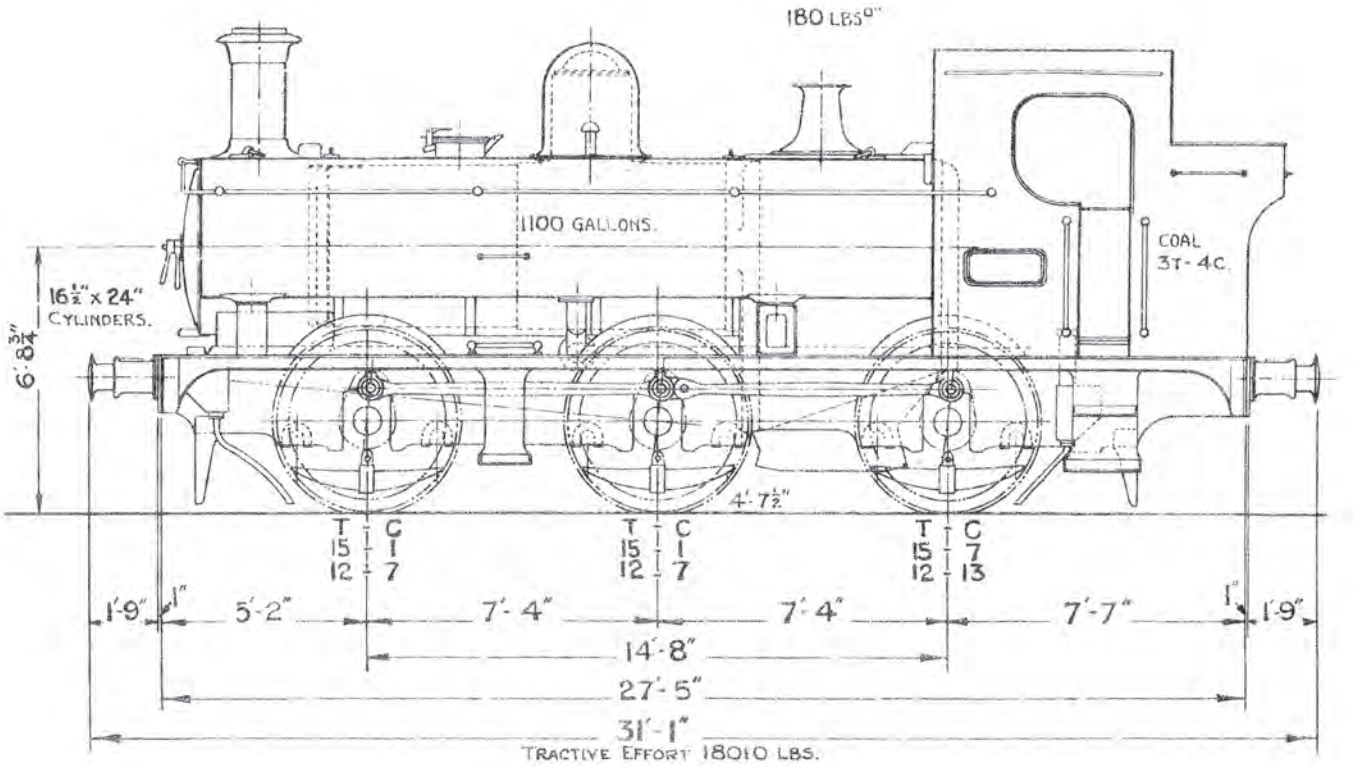

Statistics

No.	Built	First allocation	Last allocation	Withdrawal	Remarks
5400	6/32	Southall	Oswestry	4/59	
5401	11/31	Westbury	Oswestry	2/57	
5402	11/31	Westbury	Westbury	9/58	Westbury throughout
5403	12/31	Westbury	Westbury	8/57	
5404	12/31	Banbury	Banbury	12/57	9 depot allocations
5405	1/32	Banbury	Oswestry	10/57	
5406	1/32	Gloucester	Westbury	9/57	
5407	1/32	Stafford Road	Banbury	6/60	
5408	2/32	Worcester	Gloucester	12/56	
5409	2/32	Southall	Neasden	6/59	Aylesbury sub-depot
5410	2/32	Southall	Yeovil Town	10/63	
5411	3/32	Southall	Taunton	6/58	
5412	3/32	Southall	Exeter	4/62	9 depot allocations
5413	3/32	Southall	Gloucester	10/57	
5414	4/32	Southall	Ebbw Junction	10/59	
5415	4/32	Southall	Southall	7/57	
5416	4/32	Southall	Yeovil Town	10/63	
5417	5/32	Southall	Banbury	1/61	
5418	5/32	Southall	Gloucester	6/60	
5419	5/32	Southall	Westbury	2/58	
5420	11/35	Southall	Gloucester	10/63	8 depot allocations
5421	11/35	Southall	Oswestry	9/62	
5422	11/35	Southall	Oswestry	6/60	
5423	12/35	Westbury	Westbury	6/59	Westbury throughout
5424	12/35	Stafford Road	Banbury	4/59	
6400	2/32	Aberdare	Yeovil Town	4/64	
6401	2/32	Merthyr	Ebbw Junction	6/60	14 depot allocations
6402	2/32	Cardiff Canton	Laira	6/59	
6403	3/32	Stafford Road	Stourbridge	12/63	
6404	3/32	Stourbridge	Oswestry	6/59	
6405	3/32	Stourbridge	Croes Newydd	6/59	
6406	4/32	Laira	Laira	6/60	Laira depot throughout
6407	4/32	Laira	Exeter	8/58	
6408	4/32	Laira	Tondu	2/62	15 depot allocations
6409	4/32	Laira	Ebbw Junction	3/59	
6410	11/34	Aberdare	Tondu	11/62	
6411	11/34	Cardiff Cathays	Cardiff Cathays	3/61	
6412	11/34	Landore	Gloucester	11/64	Preserved
6413	11/34	Cardiff Canton	Laira	11/61	
6414	11/34	Laira	Laira	6/59	Laira throughout
6415	11/34	Ebbw Junction	Gloucester	11/61	
6416	11/34	Llantrisant	Merthyr	9/63	21 depot allocations
6417	12/34	Laira	Ebbw Junction	6/59	
6418	12/34	Stourbridge	Stourbridge	11/62	15 depot allocations
6419	12/34	Laira	Yeovil Town	12/64	

No.	Built	First allocation	Last allocation	Withdrawal	Remarks
6420	8/35	Laira	Laira	11/59	
6421	8/35	Laira	Laira	1/63	
6422	8/35	Stafford Road	Stafford Road	9/62	
6423	9/35	Cardiff Cathays	Merthyr	8/58	14 depot allocations
6424	9/35	Ebbw Junction	Stourbridge	9/64	
6425	11/35	Kidderminster	Ebbw Junction	1/61	
6426	11/35	Ebbw Junction	Ebbw Junction	3/61	
6427	11/35	Cardiff Cathays	Merthyr	8/58	11 depot allocations
6428	11/35	Ebbw Junction	Stourbridge	3/59	
6429	11/35	Ebbw Junction	Wellington (Salop)	3/62	
6430	3/37	Kidderminster	Yeovil Town	10/64	Preserved
6431	3/37	Landore	Tondu	1/63	
6432	3/37	Pontypool Road	Pontypool Road	3/59	Pontypool Road allocations
6433	3/37	Cardiff Canton	Merthyr	1/63	
6434	3/37	Merthyr	Stourbridge	9/64	
6435	4/37	Cardiff Cathays	Yeovil Town	10/64	Preserved
6436	4/37	Cardiff Cathays	Tondu	9/62	15 depot allocations
6437	4/37	Pontypool Road	Gloucester	7/63	
6438	4/37	Ebbw Junction	Laira	11/62	
6439	4/37	Ebbw Junction	Ebbw Junction	8/62	
7400	7/36	Carmarthen	Carmarthen	6/60	
7401	8/36	Carmarthen	Hereford	8/59	
7402	8/36	Pontypool Road	Carmarthen	7/62	
7403	8/36	Stourbridge	Severn Tunnel Jcn	1/64	
7404	8/36	Weymouth	Swansea East Dock	6/64	
7405	8/36	Brecon	Carmarthen	12/63	
7406	8/36	Croes Newydd	Aberystwyth	3/62	
7407	8/36	Didcot	Carmarthen	12/63	
7408	8/36	Weymouth	Carmarthen	8/62	9 depot allocations
7409	8/36	Croes Newydd	Croes Newydd	8/61	
7410	12/36	Aberystwyth	Oswestry	1/61	13 depot allocations
7411	12/36	Fishguard Goodwick	Oxford	5/59	
7412	12/36	Fishguard Goodwick	Oxford	7/63	
7413	12/36	Fishguard Goodwick	Stourbridge	9/64	9 depot allocations
7414	12/36	Stourbridge	Stourbridge	9/64	
7415	12/36	Yeovil	Swindon	2/59	
7416	12/36	Gloucester	Hereford	1/59	
7417	1/37	Fishguard Goodwick	Machynlleth	9/61	
7418	1/37	Swindon	Stourbridge	9/64	13 depot allocations
7419	1/37	Duffryn Yard	Carmarthen	7/60	
7420	5/37	Brecon	Tyseley	7/59	
7421	5/37	Taunton	Swindon	11/61	
7422	5/37	Laira	Carmarthen	3/62	
7423	5/37	Ebbw Junction	Aberdare	7/64	
7424	5/37	Gloucester	Stourbridge	9/64	
7425	6/37	Duffryn Yard	Carmarthen	6/62	

No.	Built	First allocation	Last allocation	Withdrawal	Remarks
7426	6/37	Severn Tunnel Jcn	Tyseley	7/63	
7427	6/37	Laira	Swansea East Dock	6/64	
7428	6/37	Ebbw Junction	Oswestry	10/62	
7429	6/37	Ebbew Junction	Stourbridge	2/61	
7430	8/48	Stourbridge	Stourbridge	12/63	Stourbridge depot throughout
7431	8/48	Croes Newydd	Croes Newydd	8/64	
7432	8/48	Stourbridge	Stourbridge	9/64	
7433	8/48	Croes Newydd	Croes Newydd	2/61	Croes Newydd depot throughout
7434	8/48	Oswestry	Oswestry	10/62	
7435	9/48	Stourbridge	Aberdare	7/64	
7436	9/48	Oxford	Bristol SPM	6/64	
7437	9/48	Worcester	Llanelli	3/65	
7438	10/48	Danygraig	Tyseley	2/59	
7439	10/48	Llanelli	Llanelli	4/65	
7440	1/50	Croes Newydd	Carmarthen	10/62	
7441	1/50	Slough	Stourbridge	10/63	
7442	2/50	Slough	Carmarthen	12/63	
7443	2/50	Croes Newydd	Stourbridge	9/64	
7444	2/50	Carmarthen	Llanelli	7/64	
7445	3/50	Cardiff Cathays	Carmarthen	3/64	
7446	3/50	St Blazey	Llanelli	7/64	
7447	3/50	Croes Newydd	Stourbridge	4/59	
7448	4/50	Stourbridge	Pontypool Road	4/63	
7449	4/50	Stourbridge	Stourbridge	6/63	

94XX, 84XX & 34XX
Dimensions & Weight Diagram

Cylinders	17½in x 24in
Wheel diameter	4ft 7½ in
Boiler pressure	200 lbs psi
Heating surface	1,245.82sqft
Grate area	17.4sqft
Tank capacity	1,300 gallons
Bunker capacity	3½ tons coal
Weight	55 tons 7 cwt
Axleload	19 tons 5 cwt
Tractive effort	22,515 lbs

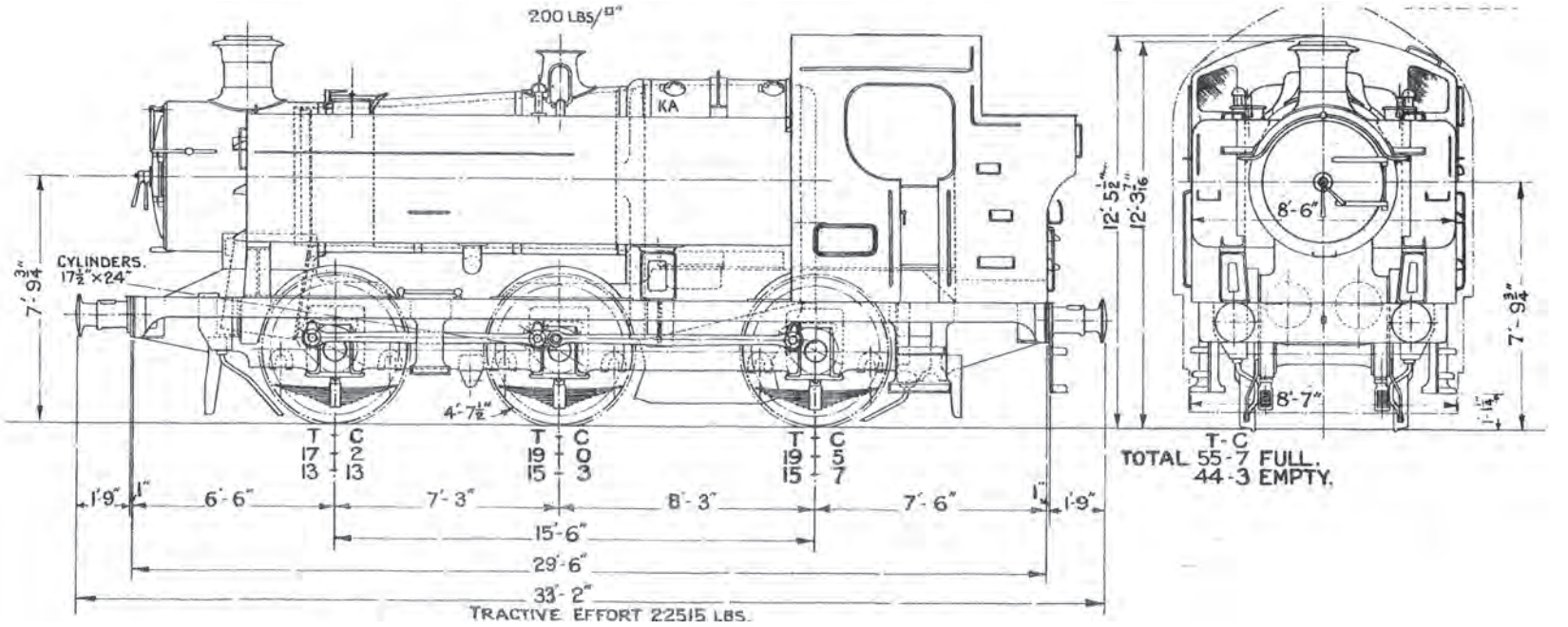

Statistics

No.	Built	First allocation	Last allocation	Withdrawal	
9400	2/47	Swindon	Old Oak Common	12/59	Preserved, STEAM Swindon
9401	2/47	Old Oak Common	Bromsgrove	7/63	
9402	4/47	Old Oak Common	Reading	8/59	
9403	3/47	Old Oak Common	Oxford	6/59	
9404	4/47	Old Oak Common	Old Oak Common	6/65	
9405	5/47	Old Oak Common	Yeovil Pen Mill	6/65	
9406	5/47	Old Oak Common	Old Oak Common	9/64	
9407	5/47	Old Oak Common	Old Oak Common	7/62	
9408	5/47	Oxley	Llanelli	5/63	
9409	5/47	Old Oak Common	Southall	5/62	
9410	2/50	Barry	Old Oak Common	7/62	
9411	2/50	Barry	Old Oak Common	6/65	
9412	3/50	Barry	Neath	3/63	
9413	3/50	Didcot	Southall	11/63	
9414	5/50	Slough	Old Oak Common	8/60	
9415	5/50	Slough	Old Oak Common	6/65	
9416	5/50	Oxford	Swansea East Dock	1/62	
9417	5/50	Didcot	Southall	6/59	
9418	5/50	Old Oak Common	Southall	6/65	
9419	6/50	Old Oak Common	Old Oak Common	3/63	
9420	6/50	Reading	Old Oak Common	3/64	
9421	7/50	Slough	Slough	2/62	
9422	7/50	Old Oak Common	Old Oak Common	12/63	
9423	7/50	Reading	Old Oak Common	2/63	

No.	Built	First allocation	Last allocation	Withdrawal	
9424	7/50	Slough	Ebbw Junction	12/62	
9425	9/50	Chester	Treherbert	11/63	
9426	9/50	Banbury	Cardiff East Dock	5/65	
9427	9/50	Stourbridge	Aberbeeg	6/59	
9428	9/50	Stafford Road	Stafford Road	6/60	
9429	10/50	Worcester	Llanelli	12/63	
9430	10/50	Neath	Yeovil Pen Mill	6/65	
9431	11/50	Duffryn Yard	Swansea East Dock	4/64	
9432	11/50	Tyseley	Tyseley	11/59	
9433	12/50	Laira	Penzance	7/62	
9434	1/51	Truro	Penzance	6/60	
9435	1/51	Stafford Road	Old Oak Common	9/64	
9436	1/51	Neath	Landore	7/60	
9437	1/51	Duffryn Yard	Radyr	6/65	
9438	2/51	Banbury	Gloucester	6/59	
9439	2/51	Exeter	Exeter	6/59	
9440	2/51	Newton Abbot	Old Oak Common	7/63	
9441	3/51	Gloucester	Swansea East Dock	11/63	
9442	3/51	Neath	Neath	7/64	
9443	3/51	Llanelli	Hereford	6/59	
9444	4/51	Duffryn Yard	Aberbeeg	3/63	
9445	4/51	Gloucester	Gloucester	1/60	
9446	5/51	Neath	Radyr	5/65	
9447	5/51	Duffryn Yard	Reading	1/61	
9448	5/51	Neath	Neath	7/62	
9449	6/51	Banbury	Banbury	6/60	
9450	6/51	Stourbridge	Reading	6/64	
9451	7/51	Neath	Tondu	7/62	
9452	7/51	Llanelli	Llanelli	5/65	
9453	7/51	Bristol SPM	Gloucester	11/64	
9454	9/51	Duffryn Yard	Duffryn Yard	1/62	
9455	9/51	Duffryn Yard	Old Oak Common	4/63	
9456	9/51	Duffryn Yard	Radyr	4/64	
9457	10/51	Danygraig	Radyr	7/64	
9458	10/51	Ebbw Junction	Aberbeeg	1/61	
9459	11/51	Cardiff Canton	Aberbeeg	9/59	
9460	11/51	Cardiff Canton	Aberbeeg	2/62	
9461	12/51	Duffryn Yard	Radyr	5/65	
9462	12/51	Penzance	Newton Abbot	11/60	
9463	1/52	Penzance	Southall	6/65	
9464	1/52	Gloucester	Radyr	6/65	
9465	1/52	Llanelli	Llanelli	2/62	
9466	2/52	Worcester	Radyr	7/64	Preserved
9467	2/52	Laira	Laira	5/62	
9468	2/52	Llanelli	Ebbw Junction	8/60	
9469	3/52	Llanelli	Old Oak Common	3/62	
9470	3/52	Cardiff Cathays	Old Oak Common	9/64	

No.	Built	First allocation	Last allocation	Withdrawal
9471	4/52	Gloucester	Gloucester	9/64
9472	4/52	Llanelli	Llanelli	5/65
9473	5/52	Neath	Neath	7/64
9474	5/52	Llanelli	Oxley	11/61
9475	6/52	Newport Pill	Radyr	5/65
9476	6/52	Swindon	Swindon	6/62
9477	7/52	Stourbridge	Southall	6/65
9478	7/52	Neath	Neath	7/62
9479	7/52	Llanelli	Old Oak Common	7/63
9480	8/52	Worcester	Radyr	4/65
9481	8/52	Bristol SPM	Bristol SPM	1/61
9482	9/52	Ebbw Junction	Aberbeeg	11/63
9483	10/52	Duffryn Yard	Duffryn Yard	7/63
9484	10/52	Landore	Swansea East Dock	4/64
9485	10/52	Danygraig	Llanelli	7/64
9486	11/52	Llanelli	Worcester	7/62
9487	11/52	Duffryn Yard	Exeter	7/62
9488	12/52	Bristol SPM	Radyr	4/65
9489	1/53	Swansea East Dock	Swansea East Dock	4/64
9490	2/54	Ebbw Junction	Worcester	12/64
9491	3/54	Danygraig	Swansea East Dock	6/59
9492	5/54	Tondu	Gloucester	6/59
9493	6/54	Cardiff Canton	Bromsgrove	9/64
9494	8/54	Cardiff East Dock	Aberbeeg	11/64
9495	10/54	Bristol SPM	Southall	6/65
9496	10/54	Stafford Road	Stafford Road	12/59
9497	12/54	Exeter	Exeter	5/62
9498	3/55	Tyseley	Old Oak Common	9/64
9499	7/55	Ebbw Junction	Aberbeeg	9/59
8400	8/49	Tyseley	Bromsgrove	9/64
8401	8/49	Cardiff Canton	Bromsgrove	9/64
8402	9/49	Newport Pill	Gloucester	11/64
8403	9/49	Newton Abbot	Bath Green Park	6/65
8404	9/49	Laira	Bromsgrove	11/61
8405	12/49	Tyseley	Bromsgrove	9/64
8406	12/49	Ebbw Junction	Bromsgrove	1/61
8407	12/49	Tyseley	Duffryn Yard	10/62
8408	1/50	Danygraig	Swansea East Dock	9/59
8409	1/50	Penzance	Bromsgrove	8/64
8410	1/50	Tyseley	Duffryn Yard	1/60
8411	1/50	Stafford Road	Stafford Road	6/60
8412	1/50	Truro	Worcester	7/59
8413	1/50	Bristol SPM	Southall	1/61
8414	1/50	Cardiff East Dock	Swansea East Dock	4/64
8415	3/50	Cardiff East Dock	Worcester	6/65
8416	3/50	Cardiff Cathays	Duffryn Yard	10/62

No.	Built	First allocation	Last allocation	Withdrawal
8417	3/50	Stafford Road	Tyseley	3/59
8418	3/50	Stourbridge	Bromsgrove	8/64
8419	4/50	Stourbridge	Barry	1/60
8420	7/50	Neath	Old Oak Common	6/65
8421	7/50	Exeter	Gloucester	12/59
8422	10/50	Newton Abbot	Southall	7/62
8423	10/50	Stafford Road	Swansea East Dock	12/59
8424	12/50	Llanelli	Oxford	1/61
8425	2/51	Laira	Cardiff East Dock	11/63
8426	1/51	St Blazey	Southall	11/63
8427	2/51	Worcester	Worcester	9/60
8428	2/51	Oxley	Oxley	10/62
8429	3/51	Cardiff East Dock	Aberbeeg	1/60
8430	1/53	Reading	Reading	5/63
8431	1/53	Swansea East Dock	Neath	8/64
8432	2/53	Old Oak Common	Oxford	7/59
8433	3/53	Old Oak Common	Old Oak Common	6/65
8434	2/53	Old Oak Common	Old Oak Common	6/59
8435	4/53	Didcot	Old Oak Common	2/62
8436	5/53	Aberbeeg	Bath Green Park	6/65
8437	5/53	Stourbridge	Aberbeeg	11/64
8438	6/53	Stourbridge	Radyr	10/62
8439	6/53	Cardiff Canton	Neath	10/62
8440	3/54	Ebbw Junction	Aberbeeg	7/62
8441	4/54	Cardiff East Dock	Cardiff Canton	12/61
8442	3/54	Neath	Neath	6/59
8443	3/54	Swansea East Dock	Swansea East Dock	6/59
8444	4/54	Aberdare	Aberbeeg	7/63
8445	6/54	Tondu	Cardiff East Dock	9/62
8446	6/54	Tondu	Barry	9/64
8447	7/54	Cardiff Canton	Cardiff Canton	6/59
8448	6/54	Tondu	Tondu	8/59
8449	6/54	Oxley	Shrewsbury	9/62
8450	8/49	Ebbw Junction	Barry	6/59
8451	9/49	Barry	Southall	11/61
8452	10/49	Tyseley	Cardiff East Dock	4/64
8453	11/49	Ebbw Junction	Tondu	10/62
8454	12/49	Leamington	Leamington	1/61
8455	1/50	Cardiff East Dock	Radyr	1/60
8456	2/50	Taunton	Southall	10/63
8457	3/50	Cardiff East Dock	Cardiff Canton	1/61
8458	4/50	Cardiff East Dock	Old Oak Common	8/63
8459	5/50	Banbury	Old Oak Common	6/65
8460	6/50	Barry	Worcester	1/61
8461	6/50	Barry	Pontypool Road	11/63
8462	7/50	Stafford Road	Oxley	8/59
8463	9/50	Tyseley	Landore	1/60

No.	Built	First allocation	Last allocation	Withdrawal
8464	10/50	Duffryn Yard	Reading	12/63
8465	11/50	Neath	Southall	11/63
8466	11/50	Neath	Radyr	7/64* Swindon Works shunter until 8/68
8467	12/51	Llanelli	Llanelli	2/62
8468	2/51	Tyseley	Tyseley	5/60
8469	3/51	Cardiff East Dock	Radyr	11/64
8470	5/51	Barry	Radyr	1/62
8471	5/51	Merthyr	Bristol Barrow Road	6/65
8472	7/51	Swindon	Old Oak Common	3/63
8473	8/51	Penzance	Penzance	1/61
8474	10/51	Llanelli	Llanelli	5/65
8475	11/51	Llanelli	Radyr	9/64
8476	3/52	Danygraig	Swansea East Dock	1/61
8477	3/52	Llanelli	Llanelli	7/62
8478	5/52	Cardiff Cathays	Radyr	1/63
8479	6/52	Westbury	Radyr	10/64
8480	3/52	Worcester	Neath	7/64
8481	3/52	Cardiff Cathays	Old Oak Common	6/65
8482	4/52	Cardiff Cathays	Duffryn Yard	9/62
8483	5/52	Danygraig	Swansea East Dock	2/62
8484	5/52	Cardiff East Dock	Radyr	6/65
8485	6/52	Truro	St Blazey	6/59
8486	6/52	Truro	Bath Green Park	6/65
8487	7/52	Gloucester	Old Oak Common	11/63
8488	7/52	Gloucester	Llanelli	5/65
8489	7/52	Cardiff East Dock	Gloucester	2/62
8490	7/52	Duffryn Yard	Duffryn Yard	10/62
8491	8/52	Bristol SPM	Gloucester	7/63
8492	8/52	Bristol SPM	Bristol SPM	6/59
8493	9/52	Ebbw Junction	Aberbeeg	11/64
8494	9/52	Ebbw Junction	Didcot	1/62
8495	10/52	Barry	Radyr	11/64
8496	10/52	Worcester	Reading	7/63
8497	11/52	Swindon	Radyr	7/64* Swindon Works shunter until 6/68
8498	11/52	Swindon	Southall	6/65
8499	11/52	Swindon	Aberbeeg	6/62
3400	12/55	Cardiff East Dock	Radyr	11/64
3401	1/56	Cardiff East Dock	Radyr	11/64
3402	2/56	Cardiff East Dock	Radyr	11/64
3403	2/56	Cardiff East Dock	Radyr	9/64
3404	3/56	Cardiff East Dock	Radyr	7/62
3405	4/56	Cardiff East Dock	Radyr	11/64
3406	5/56	Cardiff East Dock	Radyr	11/64
3407	8/56	Cardiff East Dock	Radyr	10/62
3408	8/56	Cardiff East Dock	Radyr	9/62
3409	10/56	Cardiff East Dock	Radyr	10/64

15XX
Dimensions & Weight Diagram

Cylinders	17½in x 24in
Walschaerts valve gear	
Wheel diameter	4ft 7½in
Boiler pressure	200 lbs psi
Heating surface	1,347.4sqft
Grate area	17.4sqft
Tank capacity	1,350 gallons
Bunker capacity	3¼ tons coal
Weight	58 tons 4 cwt
Axleload	19 tons 14 cwt
Tractive effort	22,515 lbs

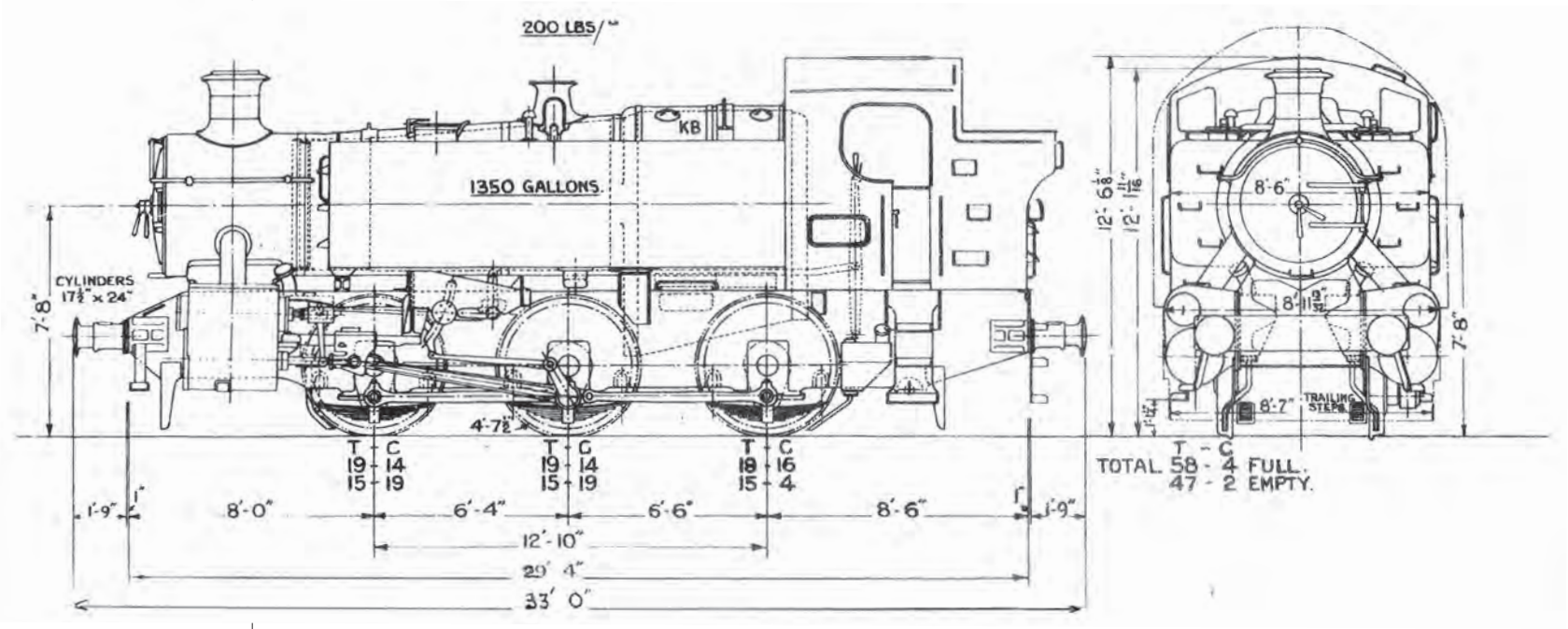

Statistics

No.	Built	First allocation	Last allocation	Withdrawal	Mileage	
1500	6/49	Old Oak Common	Old Oak Common	12/63	166,933	OOC throughout
1501	7/49	Old Oak Common	Southall	1/61	190,047	Sold to NCB, Preserved
1502	7/49	Old Oak Common	Didcot	1/61	145,890	Sold to NCB
1503	8/49	Old Oak Common	Old Oak Common	1/64	173,745	OOC throughout
1504	8/49	Old Oak Common	Old Oak Common	5/63	163,673	OOC throughout
1505	8/49	Old Oak Common	Old Oak Common	5/62	150,138	OOC throughout
1506	9/49	Newport Pill	Old Oak Common	12/63	217,700	
1507	9/49	Newport Pill	Old Oak Common	12/63	215,478	
1508	9/49	Newport Pill*	Cardiff Canton	9/62	185,981	*S. Tnl Jn from 12/49
1509	9/49	Newport Pill	Ebbw Junction	8/59	239,277	Sold to NCB

16XX

Dimensions & Weight Diagram

Cylinders	16½in x 24in
Wheel diameter	4ft 1½in
Boiler pressure	165 lbs psi
Heating surface	956.7sqft
Grate area	14.9sqft
Tank capacity	875 gallons
Bunker capacity	2½ tons coal
Weight	41 tons 12 cwt
Axleload	13 tons 18 cwt
Tractive effort	18,515 lbs

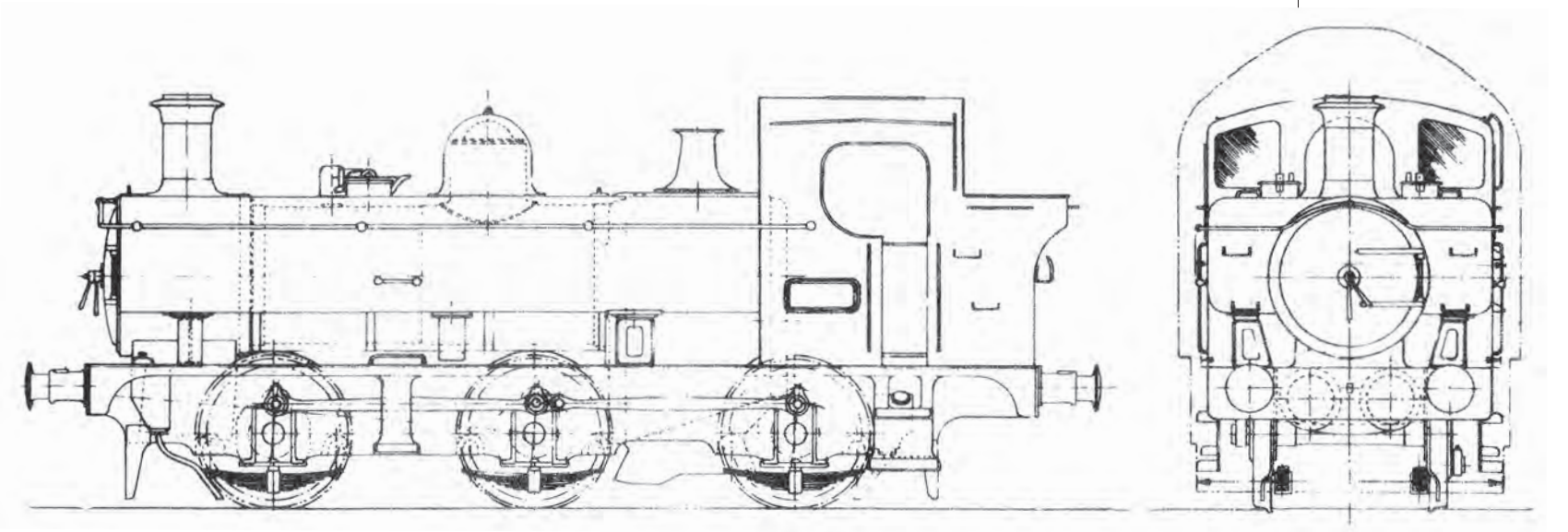

Statistics

No.	Built	First allocation	Last allocation	Withdrawal	Disposal
1600	10/49	Barry	Swindon	3/59	NCB Risca Colliery
1601	10/49	Duffryn Yard	Barry	10/58	Hayes, Bridgend
1602	10/49	Duffryn Yard	Oswestry	9/60	Hayes, Bridgend
1603	10/49	Machynlleth	Oswestry	7/59	Cohen, Morriston
1604	11/49	Oswestry	Oswestry	7/60	Swindon Dump
1605	11/49	Southall	Gloucester	2/62	Cashmore, Newport
1606	11/49	Danygraig	Llanelli	9/61	Cashmore, Newport
1607	11/49	Llanelli	Llanelli	8/65	NCB
1608	11/49	Newton Abbot	Gloucester	9/63	Swindon Dump
1609	11/49	Llanelli	Llanelli	7/62	Hayes, Bridgend
1610	11/49	Cardiff East Dock	Abercynon	12/59	Hayes, Bridgend
1611	11/49	Whitland	Llanelli	10/65	
1612	11/49	Lydney	Radyr	7/65	
1613	12/49	Carmarthen	Radyr	3/65	

No.	Built	First allocation	Last allocation	Withdrawal	Disposal
1614	12/49	Llanelli	Ebbw Junction	2/64	Swindon Dump
1615	12/49	Barry	Llanelli	6/61	Swindon Dump
1616	12/49	Lydney	Lydney	10/59	Swindon Dump
1617	12/49	Oxford	Hereford	11/63	Swindon Dump
1618	12/49	Llanelli	Croes Newydd	5/62	Cashmore, Newport
1619	12/49	Wellington	Croes Newydd	5/63	Cashmore, Great Bridge
1620	6/50	Abercynon	Abercynon	6/60	Hayes, Bridgend
1621	6/50	Birkenhead	Swindon	1/63	Swindon Dump
1622	6/50	Swansea Paxton St	Slough	6/64	Swindon Dump
1623	6/50	Lydney	Llanelli	5/65	
1624	6/50	Croes Newydd	St Blazey	2/62	Buttigieg, Pontnewydd
1625	8/50	Lydney	Hereford	6/60	Hayes, Bridgend
1626	8/50	St Blazey	Gloucester	8/62	Cashmore, Newport
1627	8/50	Lydney	Oxford	6/64	
1628	8/50	Whitland	Croes Newydd	9/66	LMR
1629	9/50	Cardiff Cathays	Worcester	6/60	Hayes, Bridgend
1630	1/51	Lydney	Oxford	6/64	
1631	1/51	Lydney	Hereford	11/64	
1632	1/51	Lydney	Croes Newydd	4/65	LMR
1633	1/51	Llanelli	Llanelli	10/62	Hayes, Bridgend
1634	2/51	Danygraig	Swindon	6/61	
1635	2/51	Oswestry	Croes Newydd	10/59	Hayes, Bridgend
1636	2/51	Oswestry	Slough	6/64	
1637	2/51	Whitland	Whitland	6/60	Hayes, Bridgend
1638	3/51	Llanelli	Croes Newydd	8/66	Preserved K.& E.S.R
1639	3/51	Lydney	Worcester	9/64	
1640	3/51	Swansea East Dock	Swindon	7/61	Swindon Dump
1641	3/51	Swansea East Dock	Abercynon	11/64	
1642	4/51	Lydney	Lydney	1/62	Cohen, Morriston
1643	4/51	Danygraig	Llanelli	10/65	
1644	4/51	Neath	Llanelli	10/59	
1645	4/51	Neath	Neath	10/62	Hayes, Bridgend
1646	5/51	Swansea East Dock	ScR Dornoch	12/62	ScR
1647	5/51	Swindon	Worcester	4/61	
1648	5/51	Swindon	Whitland	5/63	Cashmore, Newport
1649	5/51	Bristol SPM	ScR Dornoch	12/62	ScR
1650	11/54	Laira	Gloucester	2/64	
1651	12/54	Llanelli	Llanelli	10/65	
1652	12/54	Swansea East Dock	Swansea East Dock	1/60	Cohen, Morriston
1653	12/54	Ebbw Junction	Ebbw Junction	12/62	Woodham Bros, Barry
1654	12/54	Burry Port	Slough	6/64	
1655	1/55	Burry Port	Llanelli	7/65	
1656	1/55	Ebbw Junction	Ebbw Junction	6/64	
1657	1/55	Hereford	Hereford	9/64	
1658	2/55	Swindon	Swindon	11/64	Swindon Dump
1659	2/55	Carmarthen	Croes Newydd	10/60	Cohen, Morriston
1660	2/55	Croes Newydd	Croes Newydd	6/66	LMR

No.	Built	First allocation	Last allocation	Withdrawal	Disposal
1661	3/55	Kidderminster	Worcester	7/64	
1662	3/55	Worcester	Hereford	12/63	
1663	3/55	Wellington	Croes Newydd	1/65	
1664	3/55	St Blazey	Swindon	9/64	
1665	4/55	Llanelli	Llanelli	7/64	
1666	4/55	Burry Port	Gloucester	2/64	
1667	5/55	Hereford	Hereford	9/64	
1668	5/55	Taunton	Oswestry	1/65	
1669	5/55	Bristol SPM	Llanelli	10/65	

BIBLIOGRAPHY

DERRY, Richard, *The Pannier Papers No.1 94XX, 84XX, 34XX,* Irwell Press, 2008

FREEZER, C.J., *Locomotives in Outline, GWR,* Peco Publications, 1977

Jones, Robin, *Great Western Railway Pannier Tanks,* Crowood Press Ltd., 2014

MAIDMENT, David, *A Privileged Journey,* Pen & Sword, 2015

MAIDMENT, David, *An Indian Summer of Steam,* Pen & Sword, 2015

PILE, Kevin, *The Pannier Papers No.5 16XX,* Irwell Press, 2010

RCTS, *Locomotives of the Great Western, Parts 1-7*

RCTS, *Locomotives of the Great Western, Parts 8-12*

ROWLEDGE, J.W.P., *GWR Locomotive Allocations, 1922–1967,* David & Charles, 1986

RUSSELL, J.H., *Great Western Engines, A Pictorial Record, Volume 1,* Oxford Publishing Company, 1978

RUSSELL, J.H., *Great Western Engines, A Pictorial Record, Volume 2,* Oxford Publishing Company

RUSSELL, J.H., *Great Western 'Absorbed' Engines, A Pictorial Record,* Oxford Publishing Company

SCOTT-MORGAN, John, & MARTIN, Kirk, *Red Panniers, Last steam on the Underground,* 2008

SIXSMITH, Ian, *The Pannier Papers No.6 1366, 15XX,* Irwell Press, 2013

SIXSMITH, Ian, *The Pannier Papers No.7 54XX, 64XX, 74XX,* Irwell Press, 2013

SIXSMITH, Ian & DERRY, Richard, *The Pannier Papers No.2, 36XX, 37XX, 46XX,* Irwell Press, 2011

SIXSMITH, Ian & DERRY, Richard, *The Pannier Papers No.3, 57XX, 67XX, 77XX,* Irwell Press, 2011

SIXSMITH, Ian & DERRY, Richard, *The Pannier Papers No.4, 87XX, 96XX, 97XX,* Irwell Press, 2012

The Railway Publishing Company, *British Locomotive Types,* 1946

Xpress Publishing, *The Xpress Locomotive Register, Volume 4 Western Region 1950–1960*

INDEX

Photographs (black & white)
Locations

Cwm Prysol (Bala – Blaenau – Ffestiniog)
Didcot
Exeter Central
Llandeilo Junction
Llangollen
Lostwithiel
Marsh Mills
Mountain Ash Colliery
Neasden Power Station
Old Oak Common
Reading
Royal Oak
Severn Tunnel Junction
Subway Junction
Swindon
Tal-y-Wain Colliery
Trevor
Weymouth
Whitecroft (Dean Forest)

Locomotives

1500
1505
1509
1628
3650
3686
3749
4689
4692
5417
6430
7439
7714
7731
7754
7760
8471
8481
8750
8763
9450
9498
9600
9605
9655
9681
9704
9707
L90

LOCOMOTIVE PORTFOLIOS

UK £40.00 US $80.00

ISBN 1526734516

9 781526 734518

www.pen-and-sword.co.uk